REAR BUMPER (Wagon)

BO4CY-02
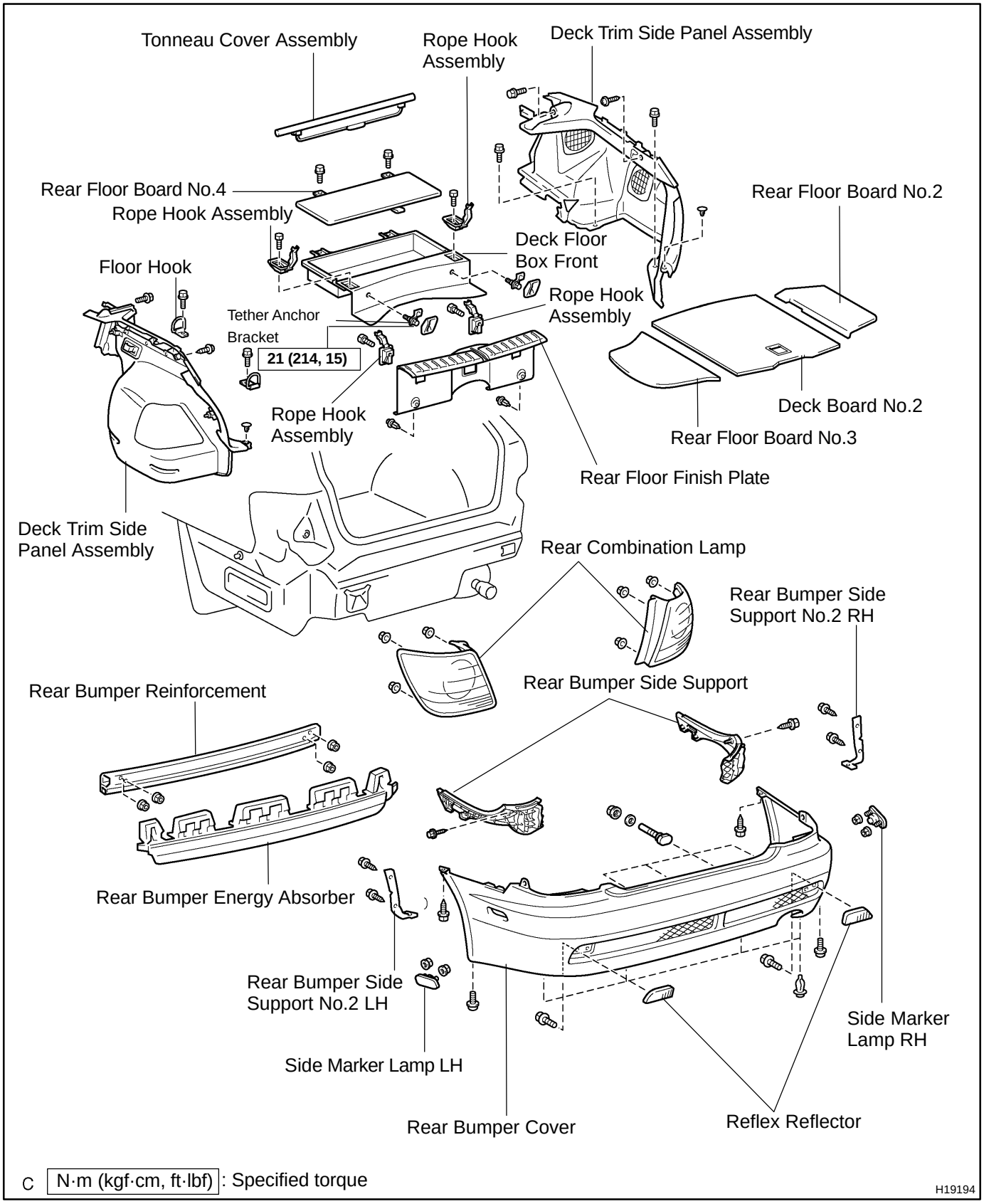
COMPONENTS