# REAR DIFFERENTIAL CARRIER

## COMPONENTS

SA1JC-05

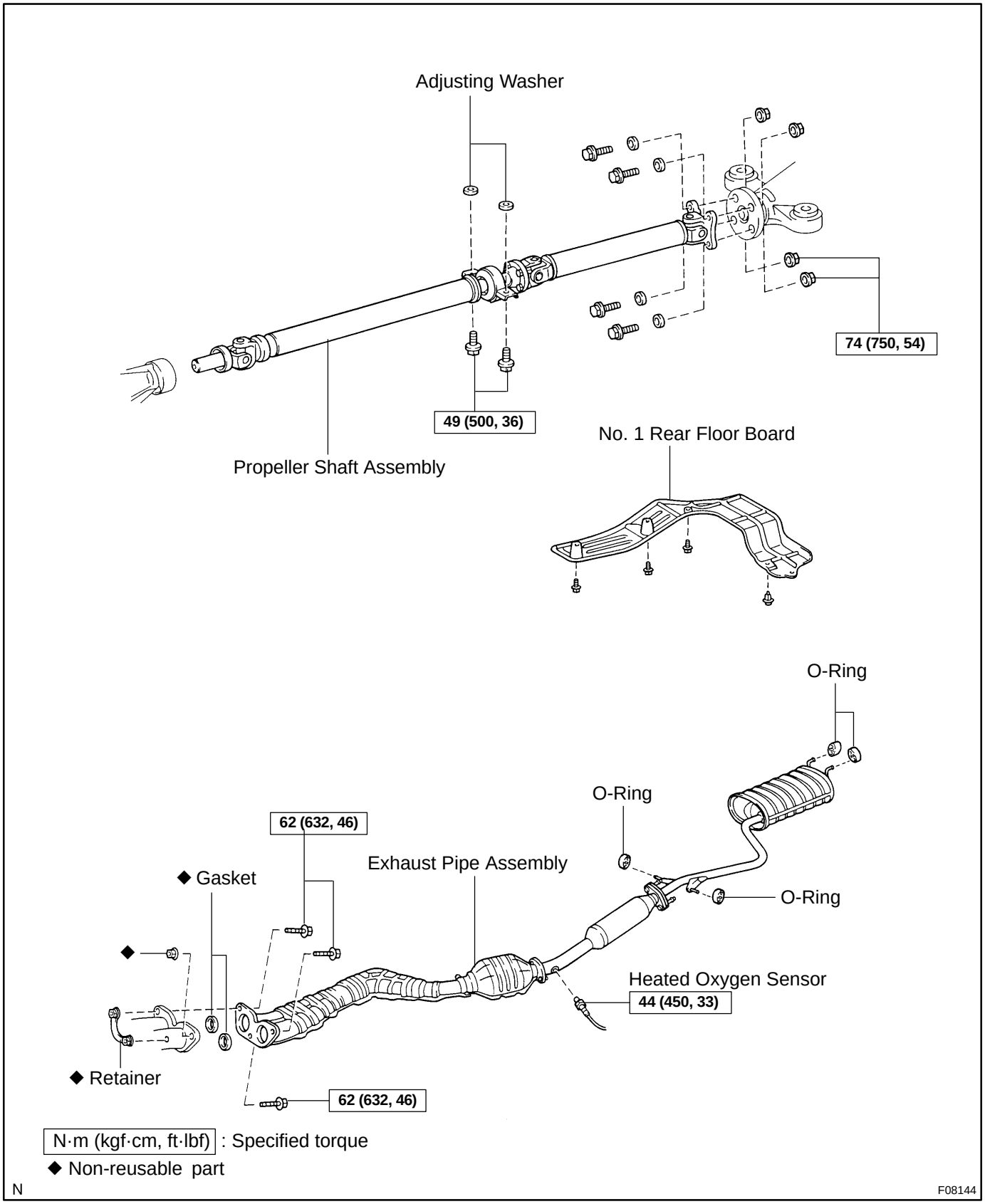

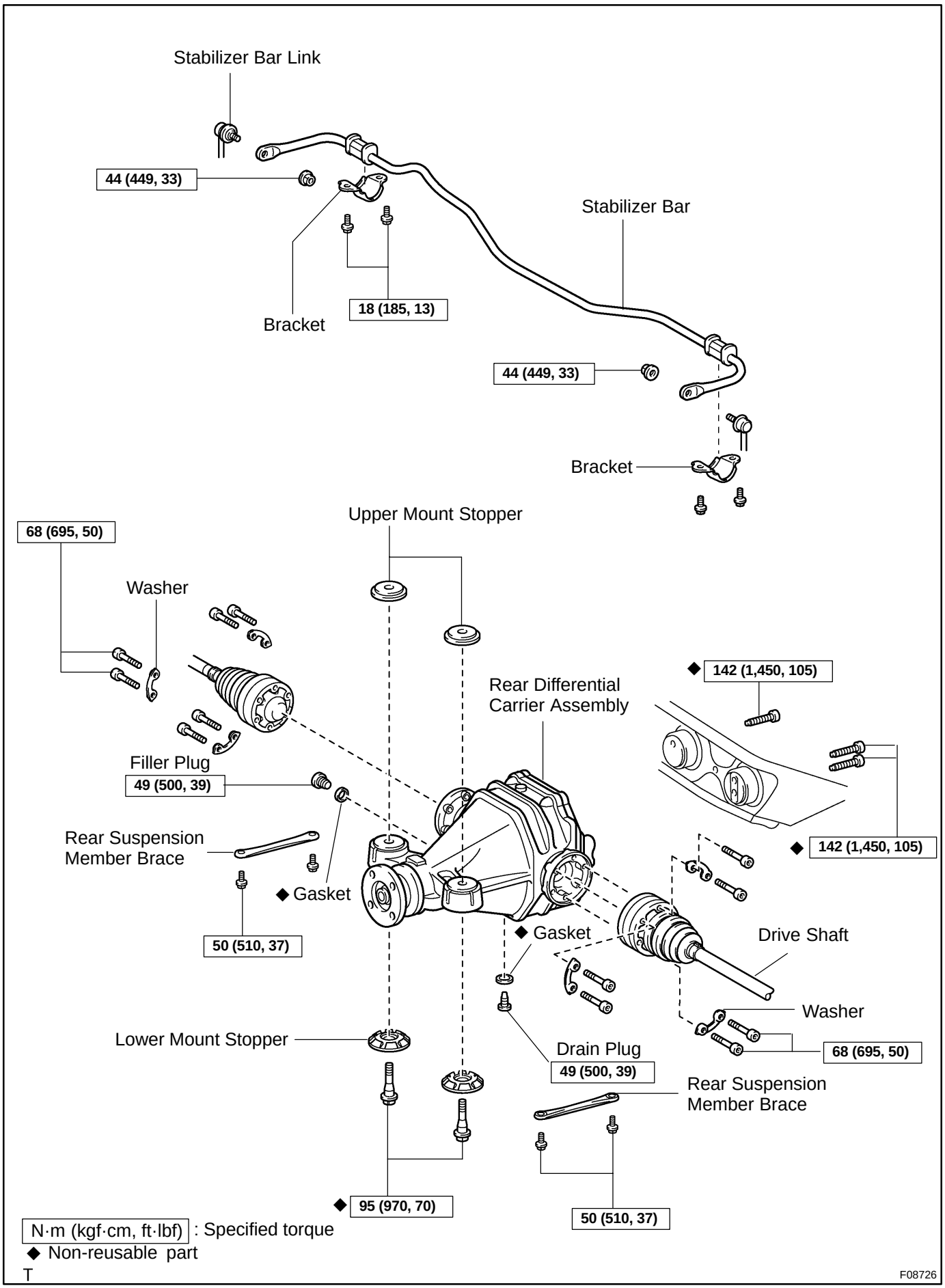
Stabilizer Bar Link
44 (449, 33)
Stabilizer Bar
18 (185, 13)
Bracket
44 (449, 33)
Bracket
Upper Mount Stopper
68 (695, 50)
Washer
◆ 142 (1,450, 105)
Rear Differential
Carrier Assembly
Filler Plug
49 (500, 39)
Rear Suspension
Member Brace
◆ 142 (1,450, 105)
◆ Gasket
50 (510, 37)
◆ Gasket
Drive Shaft
Washer
Lower Mount Stopper
Drain Plug
49 (500, 39)
68 (695, 50)
Rear Suspension
Member Brace
◆ 95 (970, 70)
50 (510, 37)
N·m (kgf·cm, ft·lbf) : Specified torque
◆ Non-reusable part
T
F08726

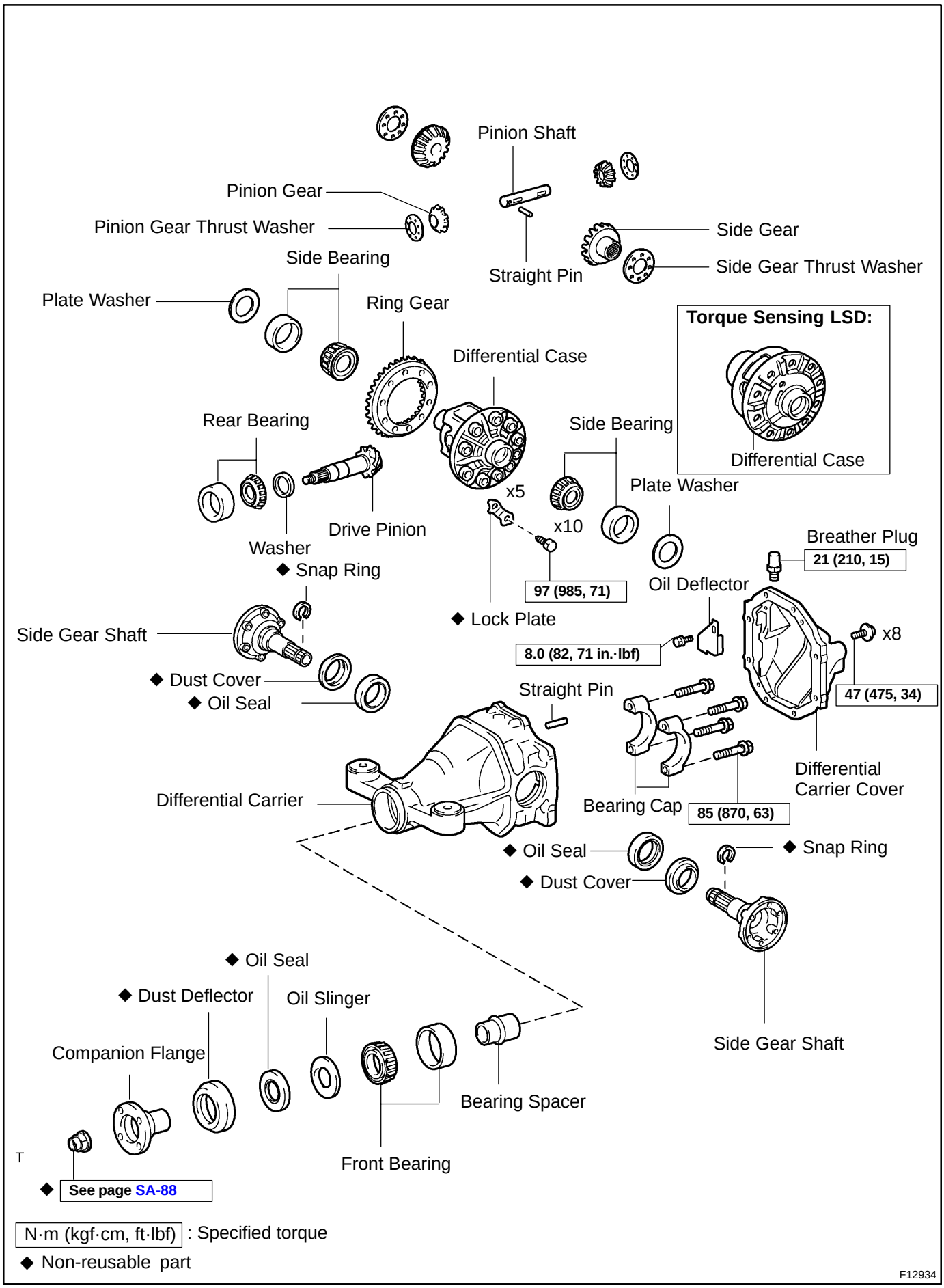
Pinion Shaft
Pinion Gear
Pinion Gear Thrust Washer
Side Gear
Side Gear Thrust Washer
Straight Pin
Side Bearing
Plate Washer
Ring Gear
Differential Case
Torque Sensing LSD:
Differential Case
Rear Bearing
Side Bearing
Plate Washer
x5
x10
Drive Pinion
Washer
Breather Plug
21 (210, 15)
◆ Snap Ring
97 (985, 71)
Oil Deflector
◆ Lock Plate
Side Gear Shaft
8.0 (82, 71 in.·lbf)
x8
◆ Dust Cover
◆ Oil Seal
Straight Pin
47 (475, 34)
Differential Carrier Cover
Differential Carrier
Bearing Cap
85 (870, 63)
◆ Oil Seal
◆ Snap Ring
◆ Dust Cover
◆ Oil Seal
◆ Dust Deflector
Oil Slinger
Side Gear Shaft
Companion Flange
Bearing Spacer
T
Front Bearing
◆ See page SA-88
N·m (kgf·cm, ft·lbf) : Specified torque
◆ Non-reusable part
F12934