POWER STEERING GEAR

COMPONENTS

SR1C1-02

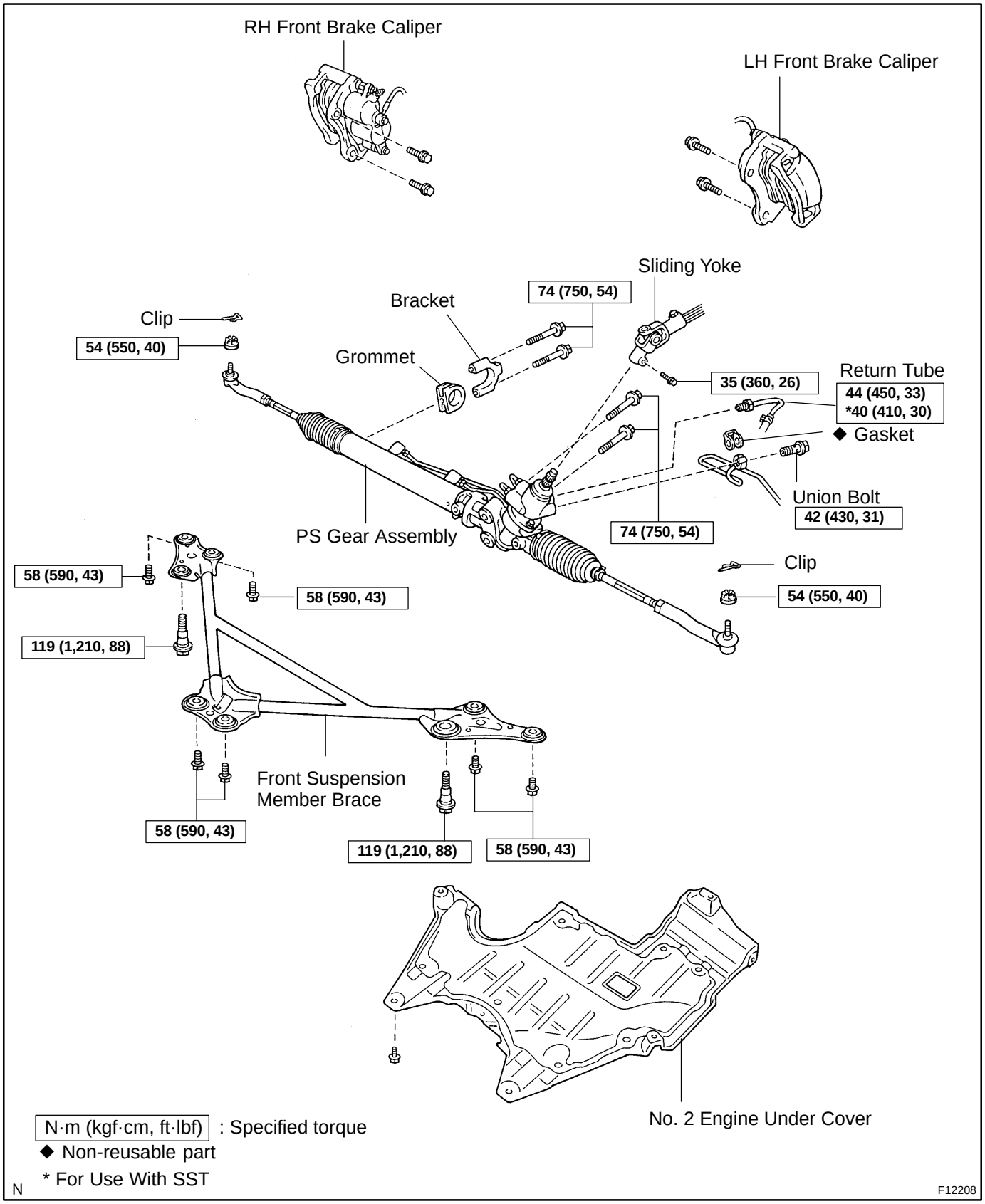

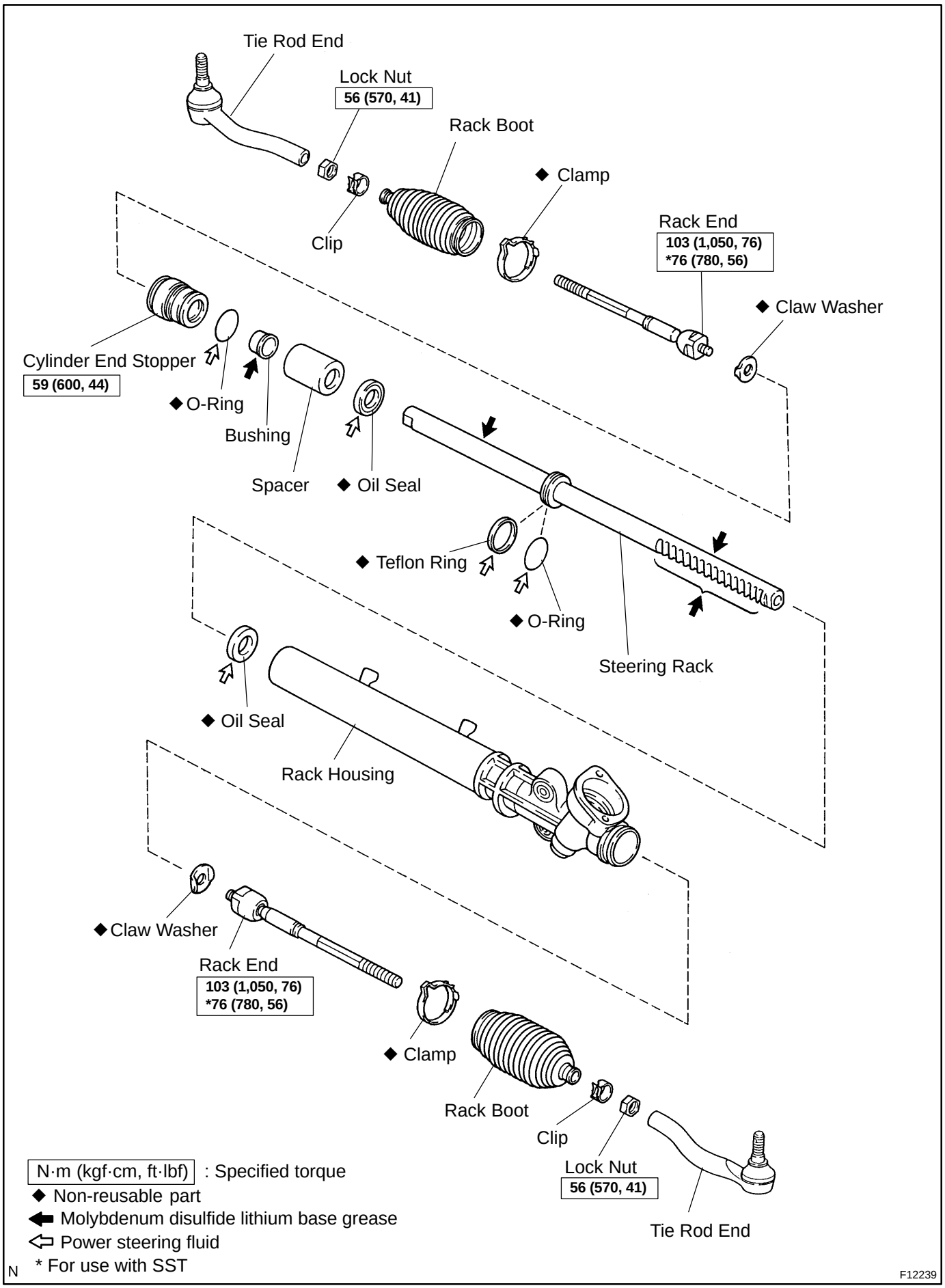
Tie Rod End
Lock Nut
56 (570, 41)
Rack Boot
◆ Clamp
Clip
Rack End
103 (1,050, 76)
*76 (780, 56)
◆ Claw Washer
Cylinder End Stopper
59 (600, 44)
◆ O-Ring
Bushing
Spacer
◆ Oil Seal
◆ Teflon Ring
◆ O-Ring
Steering Rack
◆ Oil Seal
Rack Housing
◆ Claw Washer
Rack End
103 (1,050, 76)
*76 (780, 56)
◆ Clamp
Rack Boot
Clip
Lock Nut
56 (570, 41)
Tie Rod End
N·m (kgf·cm, ft·lbf) : Specified torque
◆ Non-reusable part
Molybdenum disulfide lithium base grease
Power steering fluid
* For use with SST
N
F12239

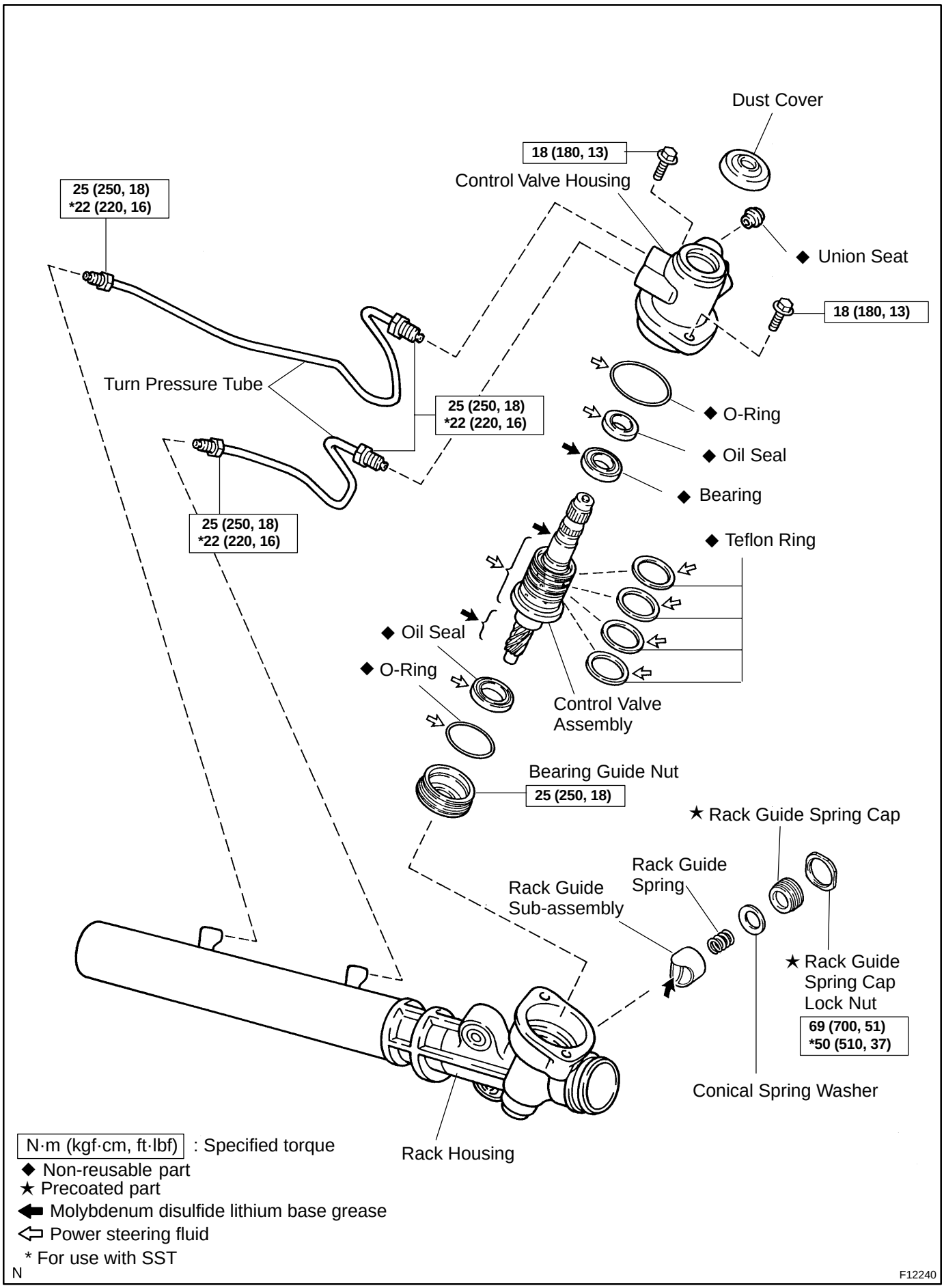
Dust Cover
18 (180, 13)
Control Valve Housing
25 (250, 18)
*22 (220, 16)
◆ Union Seat
18 (180, 13)
Turn Pressure Tube
25 (250, 18)
*22 (220, 16)
◆ O-Ring
◆ Oil Seal
◆ Bearing
25 (250, 18)
*22 (220, 16)
◆ Teflon Ring
◆ Oil Seal
◆ O-Ring
Control Valve
Assembly
Bearing Guide Nut
25 (250, 18)
★ Rack Guide Spring Cap
Rack Guide
Spring
Rack Guide
Sub-assembly
★ Rack Guide
Spring Cap
Lock Nut
69 (700, 51)
*50 (510, 37)
Conical Spring Washer
Rack Housing
N·m (kgf·cm, ft·lbf) : Specified torque
◆ Non-reusable part
★ Precoated part
Molybdenum disulfide lithium base grease
Power steering fluid
* For use with SST
N
F12240