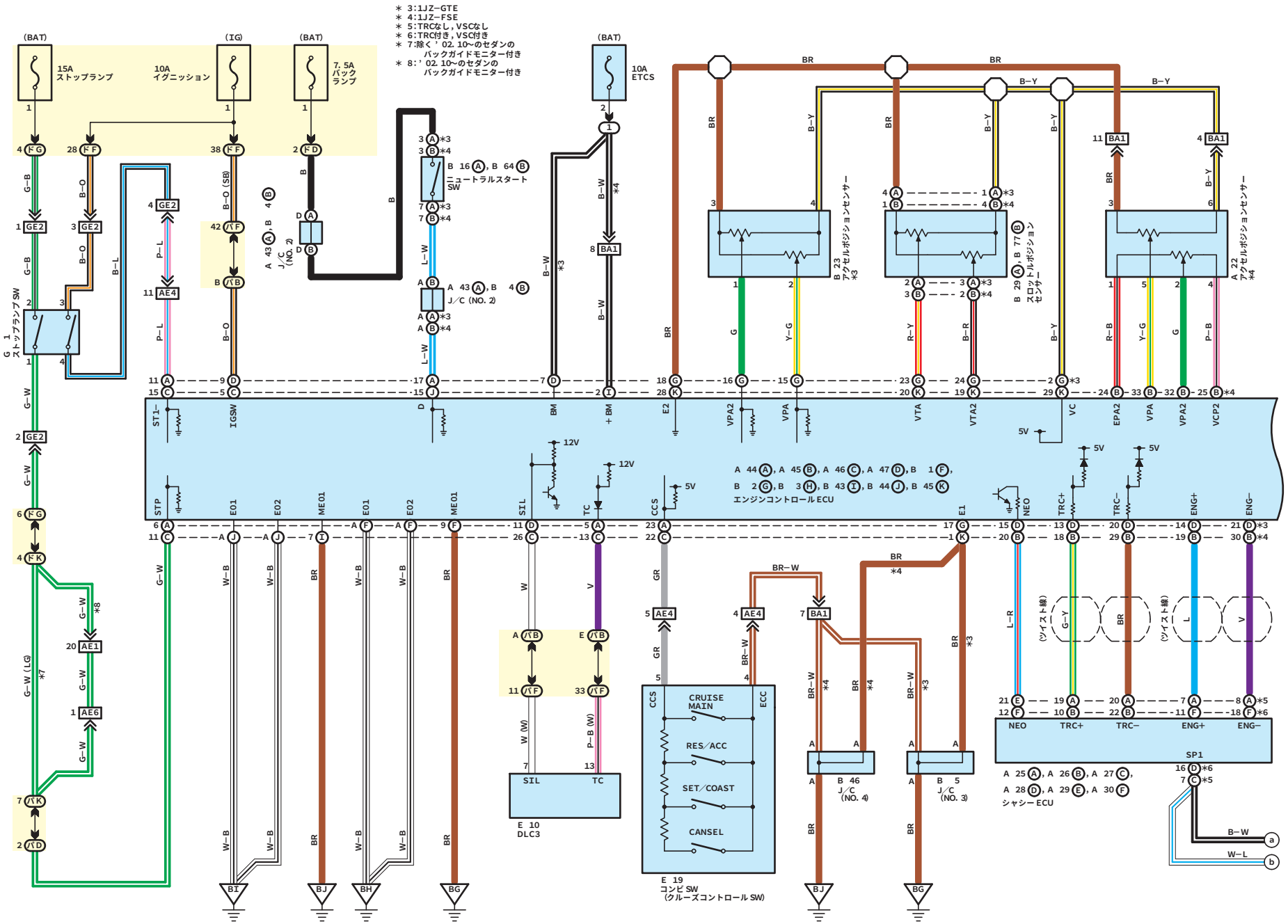

HS00A244
X300S0201000673

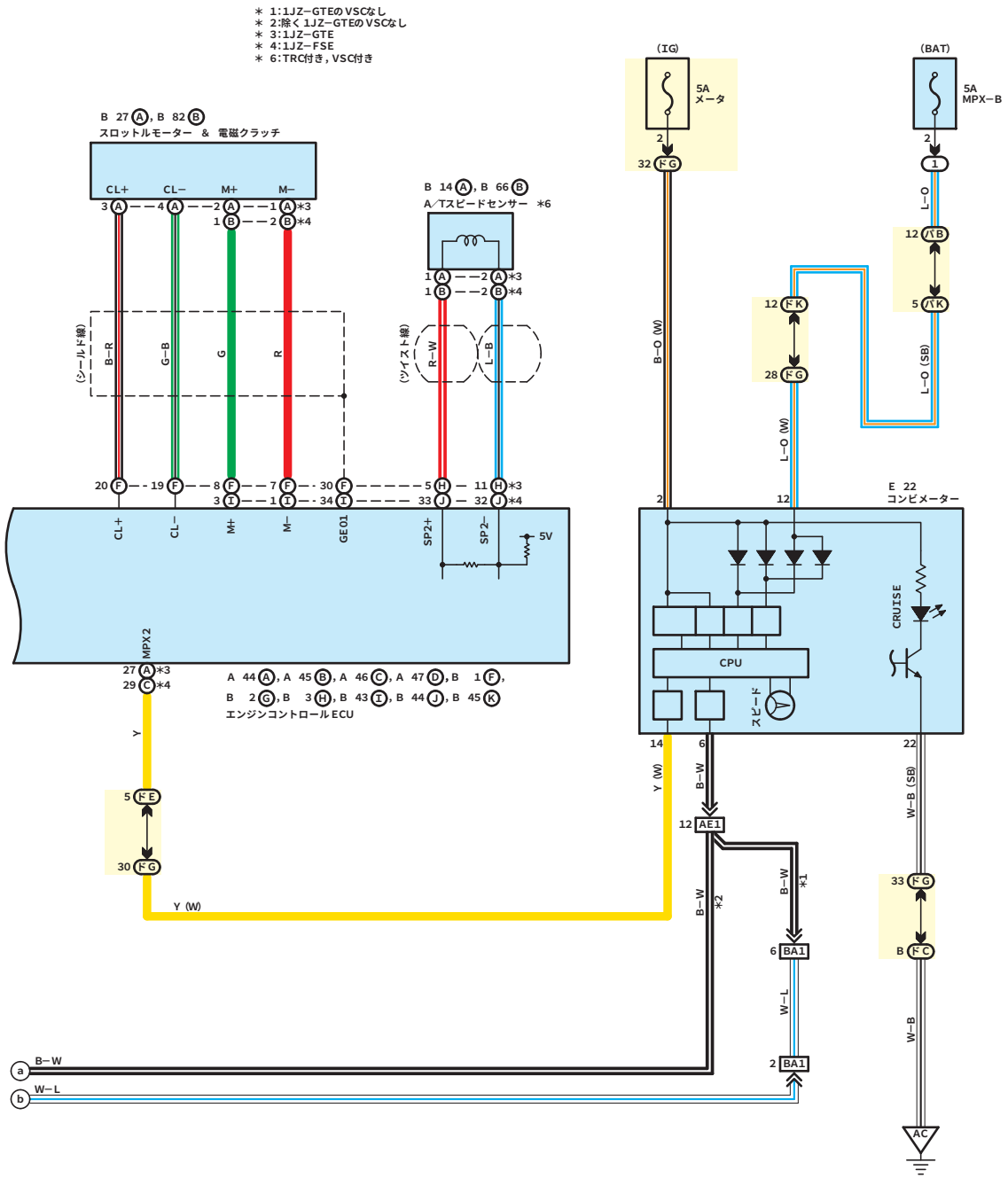

HS00A245
X300S0201000673