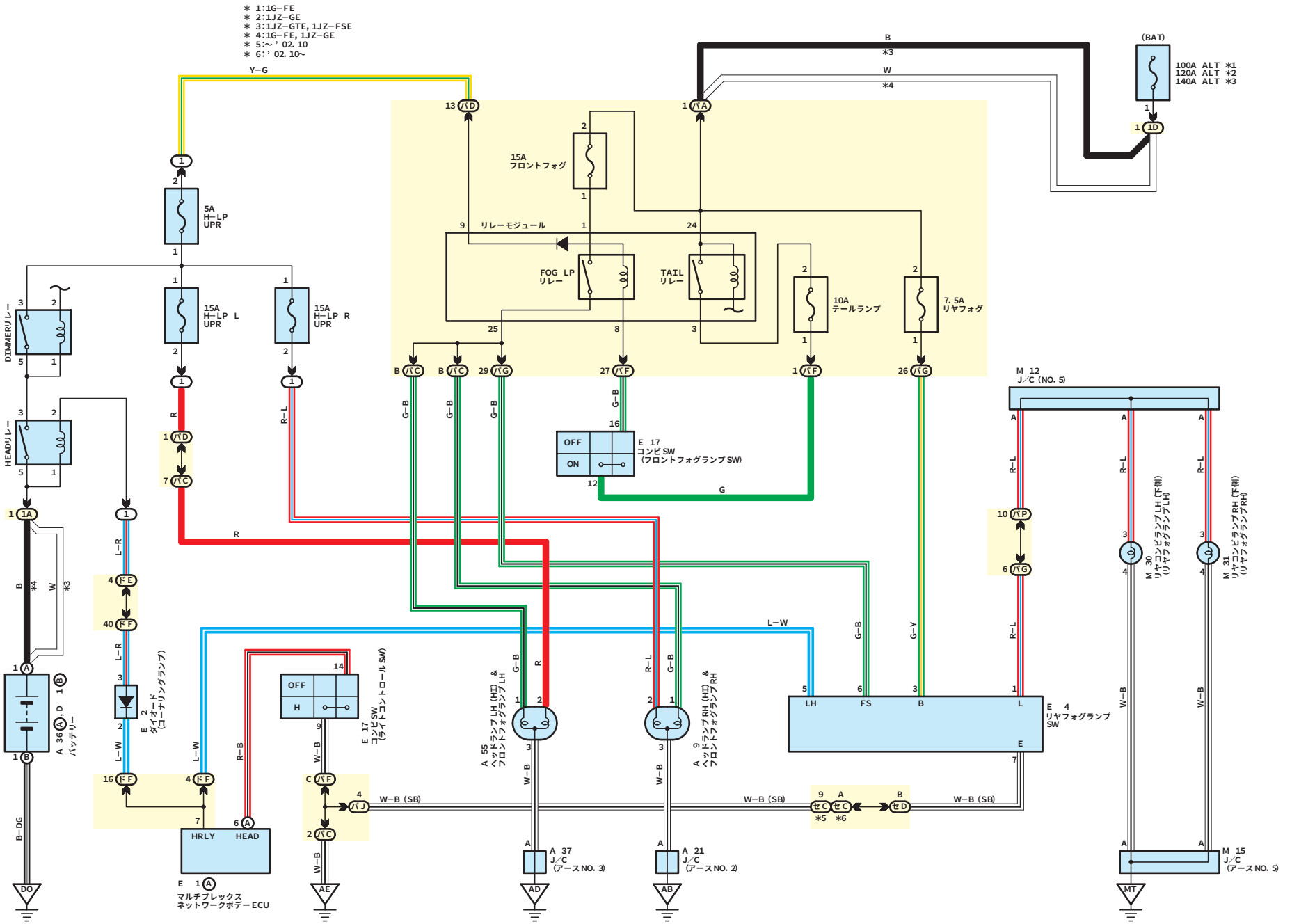

HS00A234
X300S0201000583