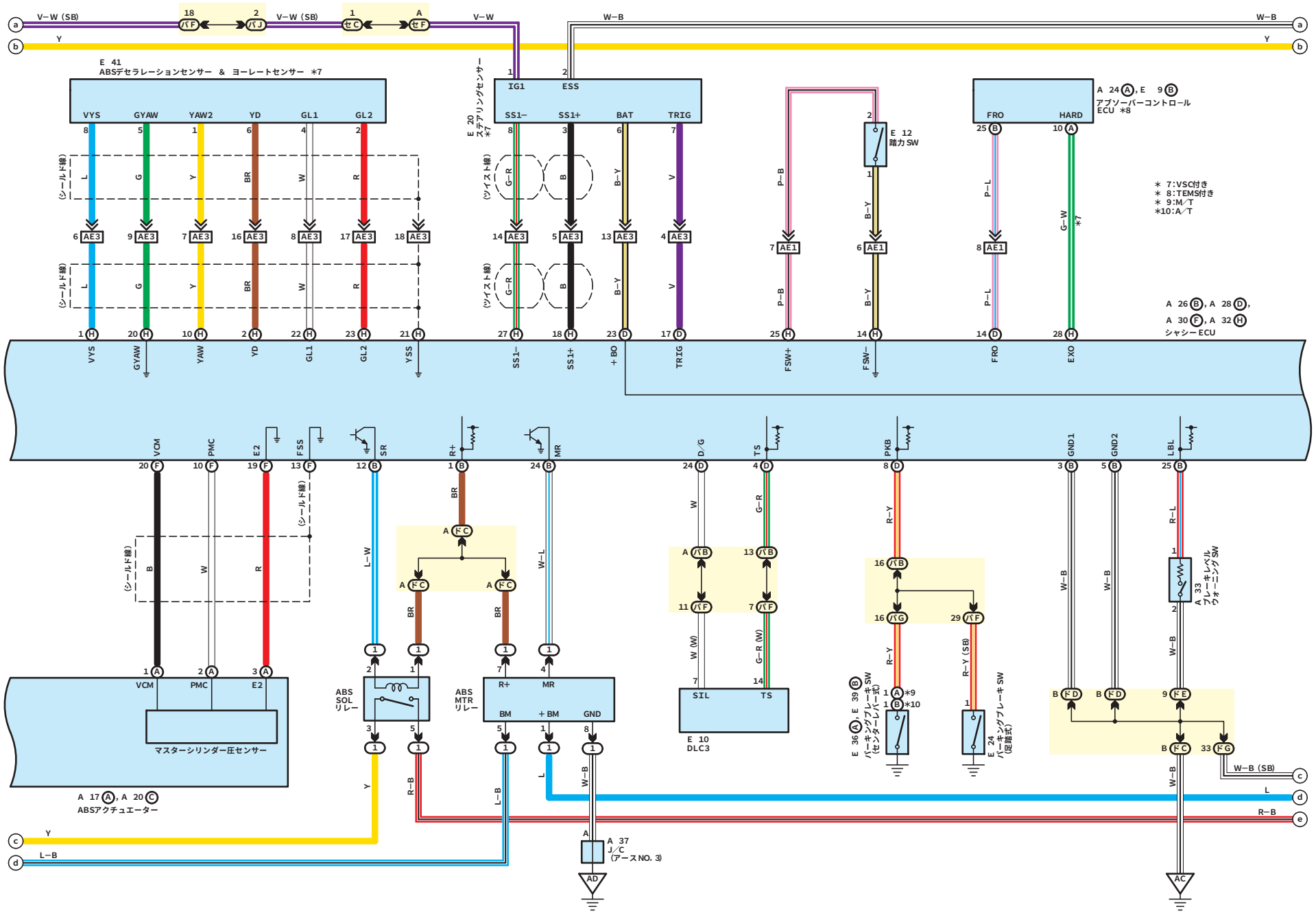

HS00A165
X300S0201000123