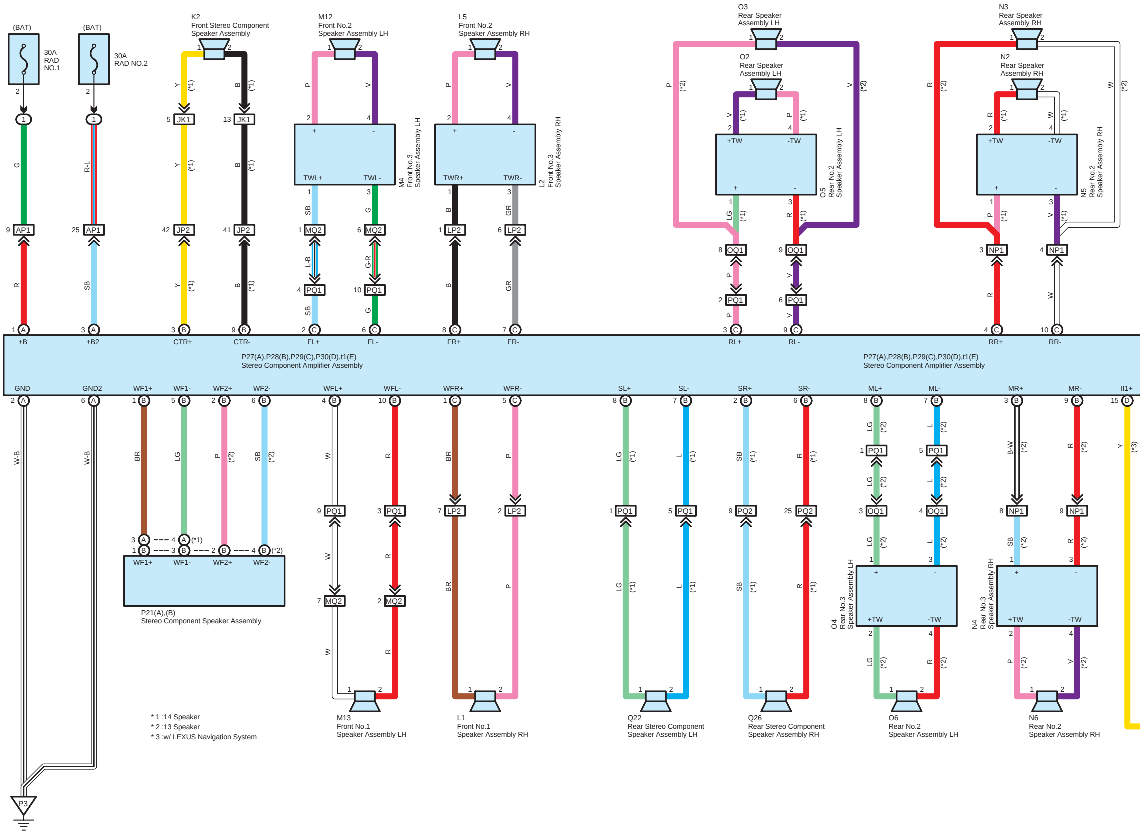
(BAT)
30A RAD NO.1
(BAT)
30A RAD NO.2
K2 Front Stereo Component Speaker Assembly
M12 Front No.2 Speaker Assembly LH
L5 Front No.2 Speaker Assembly RH
O3 Rear Speaker Assembly LH
N3 Rear Speaker Assembly RH
O2 Rear Speaker Assembly LH
N2 Rear Speaker Assembly RH
M4 Front No.3 Speaker Assembly LH
L2 Front No.3 Speaker Assembly RH
O5 Rear No.2 Speaker Assembly LH
N5 Rear No.2 Speaker Assembly RH
TWL+
TWL-
TWR+
TWR-
+TW
-TW
JK1
AP1
JP2
MQ2
PQ1
LP2
OQ1
NP1
PQ2
G
R-L
Y
B
P
V
SB
GR
LG
R
W
L-B
G-R
BR
L
B-W
(*1)
(*2)
(*3)
+B
+B2
CTR+
CTR-
FL+
FL-
FR+
FR-
RL+
RL-
RR+
RR-
P27(A),P28(B),P29(C),P30(D),t1(E)
Stereo Component Amplifier Assembly
GND
GND2
WF1+
WF1-
WF2+
WF2-
WFL+
WFL-
WFR+
WFR-
SL+
SL-
SR+
SR-
ML+
ML-
MR+
MR-
II1+
W-B
P21(A),(B)
Stereo Component Speaker Assembly
M13 Front No.1 Speaker Assembly LH
L1 Front No.1 Speaker Assembly RH
Q22 Rear Stereo Component Speaker Assembly LH
Q26 Rear Stereo Component Speaker Assembly RH
O4 Rear No.3 Speaker Assembly LH
N4 Rear No.3 Speaker Assembly RH
O6 Rear No.2 Speaker Assembly LH
N6 Rear No.2 Speaker Assembly RH
P3

* 1 :14 Speaker
* 2 :13 Speaker
* 3 :w/ LEXUS Navigation System

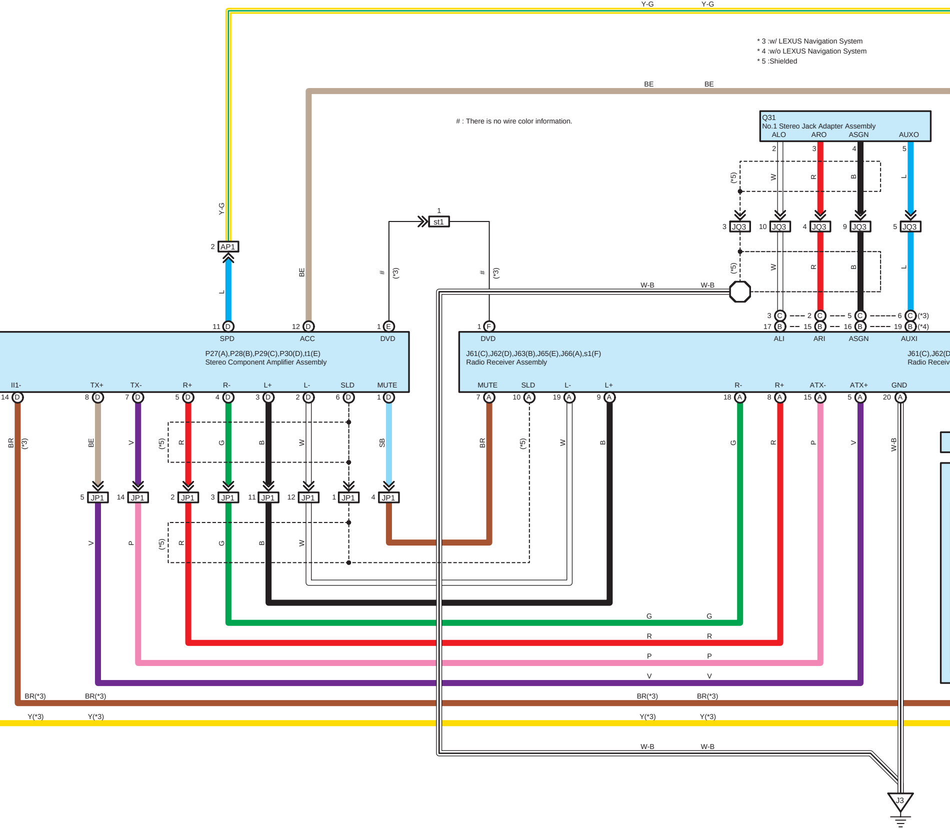
Y-G
BE
Q31
No.1 Stereo Jack Adapter Assembly
ALO
ARO
ASGN
AUXO
JQ3
st1
AP1
SPD
ACC
DVD
P27(A),P28(B),P29(C),P30(D),t1(E)
Stereo Component Amplifier Assembly
II1-
TX+
TX-
R+
R-
L+
L-
SLD
MUTE
JP1
DVD
J61(C),J62(D),J63(B),J65(E),J66(A),s1(F)
Radio Receiver Assembly
ALI
ARI
ASGN
AUXI
J61(C),J62(D
Radio Receiv
MUTE
SLD
L-
L+
R-
R+
ATX-
ATX+
GND
W-B
G
R
P
V
BR(*3)
Y(*3)
J3

* 3 :w/ LEXUS Navigation System
* 4 :w/o LEXUS Navigation System
* 5 :Shielded

# : There is no wire color information.

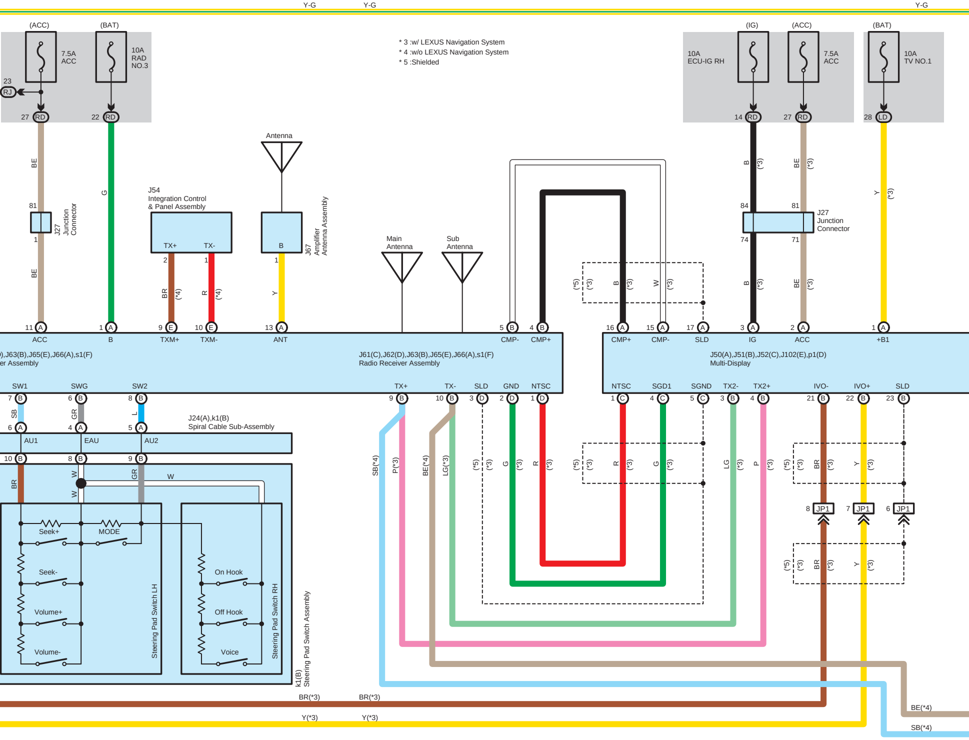
* 3 :w/ LEXUS Navigation System
* 4 :w/o LEXUS Navigation System
* 5 :Shielded
Y-G
Y-G
Y-G
(ACC)
7.5A
ACC
(BAT)
10A
RAD
NO.3
23
RJ
27
RD
22
RD
BE
G
81
J27
Junction
Connector
1
BE
J54
Integration Control
& Panel Assembly
TX+
TX-
2
1
BR
(*4)
R
(*4)
Antenna
B
1
Y
J67
Amplifier
Antenna Assembly
Main
Antenna
Sub
Antenna
(IG)
10A
ECU-IG RH
(ACC)
7.5A
ACC
(BAT)
10A
TV NO.1
14
RD
27
RD
28
LD
B
(*3)
BE
(*3)
Y
(*3)
84
81
J27
Junction
Connector
74
71
(*5)
(*3)
B
(*3)
W
(*3)
11 A
ACC
1 A
B
9 E
TXM+
10 E
TXM-
13 A
ANT
5 B
CMP-
4 B
CMP+
J61(C),J62(D),J63(B),J65(E),J66(A),s1(F)
Radio Receiver Assembly
),J63(B),J65(E),J66(A),s1(F)
er Assembly
16 A
CMP+
15 A
CMP-
17 A
SLD
3 A
IG
2 A
ACC
1 A
+B1
J50(A),J51(B),J52(C),J102(E),p1(D)
Multi-Display
SW1
7 B
SWG
6 B
SW2
8 B
TX+
9 B
TX-
10 B
SLD
3 D
GND
2 D
NTSC
1 D
NTSC
1 C
SGD1
4 C
SGND
5 C
TX2-
3 B
TX2+
4 B
IVO-
21 B
IVO+
22 B
SLD
23 B
SB
GR
L
6 A
4 A
5 A
J24(A),k1(B)
Spiral Cable Sub-Assembly
AU1
EAU
AU2
10 B
8 B
9 B
BR
W
W
GR
W
Seek+
MODE
Seek-
Volume+
Volume-
Steering Pad Switch LH
On Hook
Off Hook
Voice
Steering Pad Switch RH
k1(B)
Steering Pad Switch Assembly
SB(*4)
P(*3)
BE(*4)
LG(*3)
(*5)
(*3)
G
(*3)
R
(*3)
(*5)
(*3)
R
(*3)
G
(*3)
LG
(*3)
P
(*3)
(*5)
(*3)
BR
(*3)
Y
(*3)
8 JP1
7 JP1
6 JP1
(*5)
(*3)
BR
(*3)
Y
(*3)
BR(*3)
BR(*3)
Y(*3)
Y(*3)
BE(*4)
SB(*4)

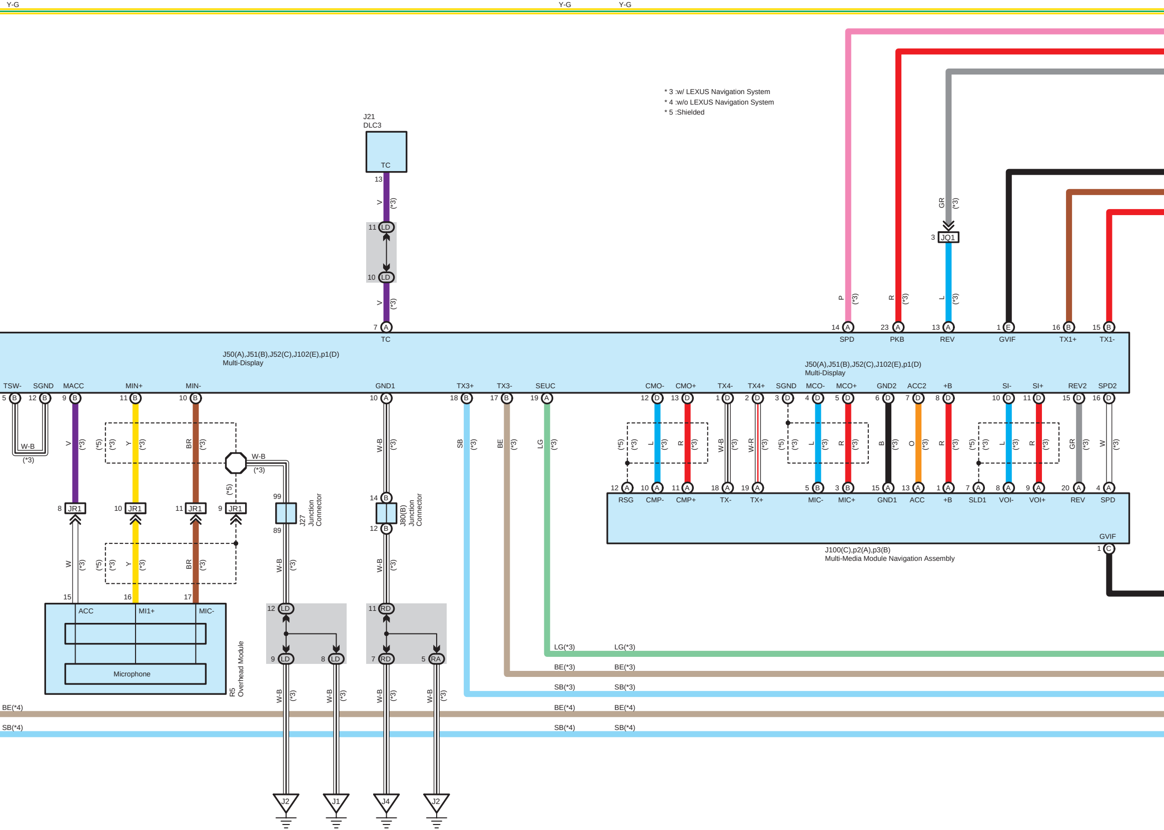

* 3 :w/ LEXUS Navigation System
* 4 :w/o LEXUS Navigation System
* 5 :Shielded

Y-G
J21
DLC3
TC
J50(A),J51(B),J52(C),J102(E),p1(D)
Multi-Display
TSW-
SGND
MACC
MIN+
MIN-
GND1
TX3+
TX3-
SEUC
CMO-
CMO+
TX4-
TX4+
SGND
MCO-
MCO+
GND2
ACC2
+B
SI-
SI+
REV2
SPD2
SPD
PKB
REV
GVIF
TX1+
TX1-
JQ1
JR1
W-B
R5
Overhead Module
ACC
MI1+
MIC-
Microphone
J27
Junction Connector
J80(B)
Junction Connector
LD
RD
RA
J1
J2
J4
J100(C),p2(A),p3(B)
Multi-Media Module Navigation Assembly
RSG
CMP-
CMP+
TX-
TX+
MIC-
MIC+
GND1
ACC
+B
SLD1
VOI-
VOI+
REV
SPD
GVIF
LG(*3)
BE(*3)
SB(*3)
BE(*4)
SB(*4)

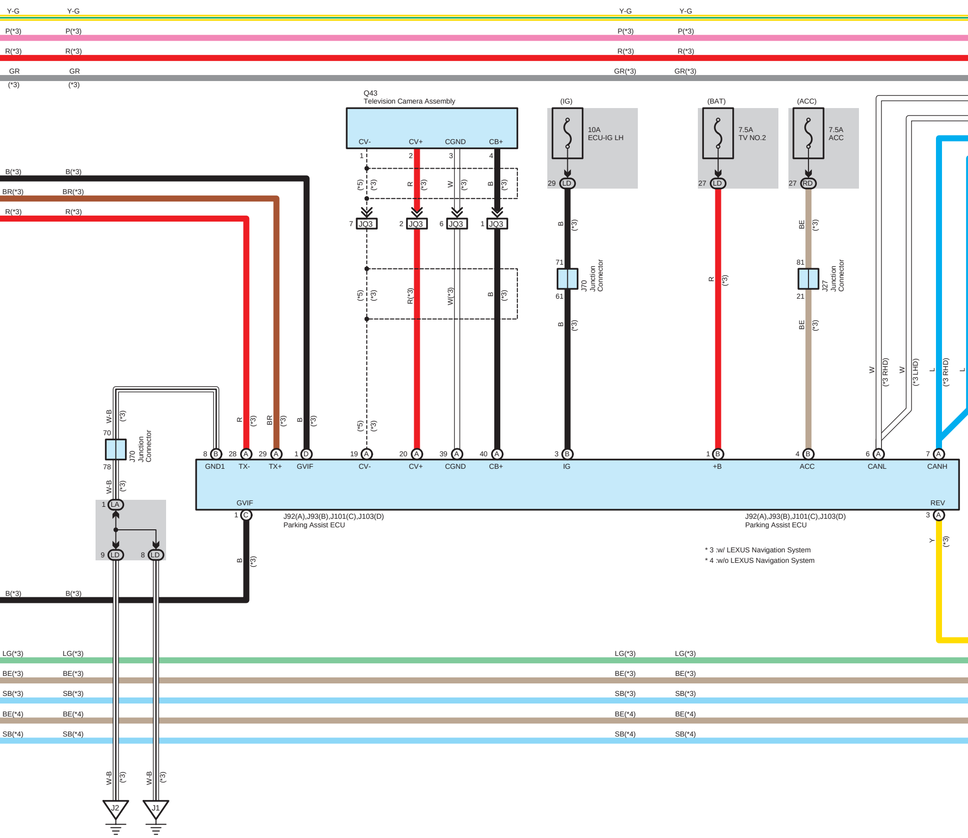
Y-G
P(*3)
R(*3)
GR
(*3)
GR(*3)
Q43
Television Camera Assembly
CV-
CV+
CGND
CB+
(*5)
(*3)
R
W
B
JQ3
R(*3)
W(*3)
(IG)
10A
ECU-IG LH
(BAT)
7.5A
TV NO.2
(ACC)
7.5A
ACC
LD
RD
BE
J70
Junction
Connector
J27
Junction
Connector
B(*3)
BR(*3)
W-B
LA
W
(*3 RHD)
(*3 LHD)
L
GND1
TX-
TX+
GVIF
IG
+B
ACC
CANL
CANH
REV
Y
J92(A),J93(B),J101(C),J103(D)
Parking Assist ECU
LG(*3)
BE(*3)
SB(*3)
BE(*4)
SB(*4)
J2
J1

* 3 :w/ LEXUS Navigation System
* 4 :w/o LEXUS Navigation System

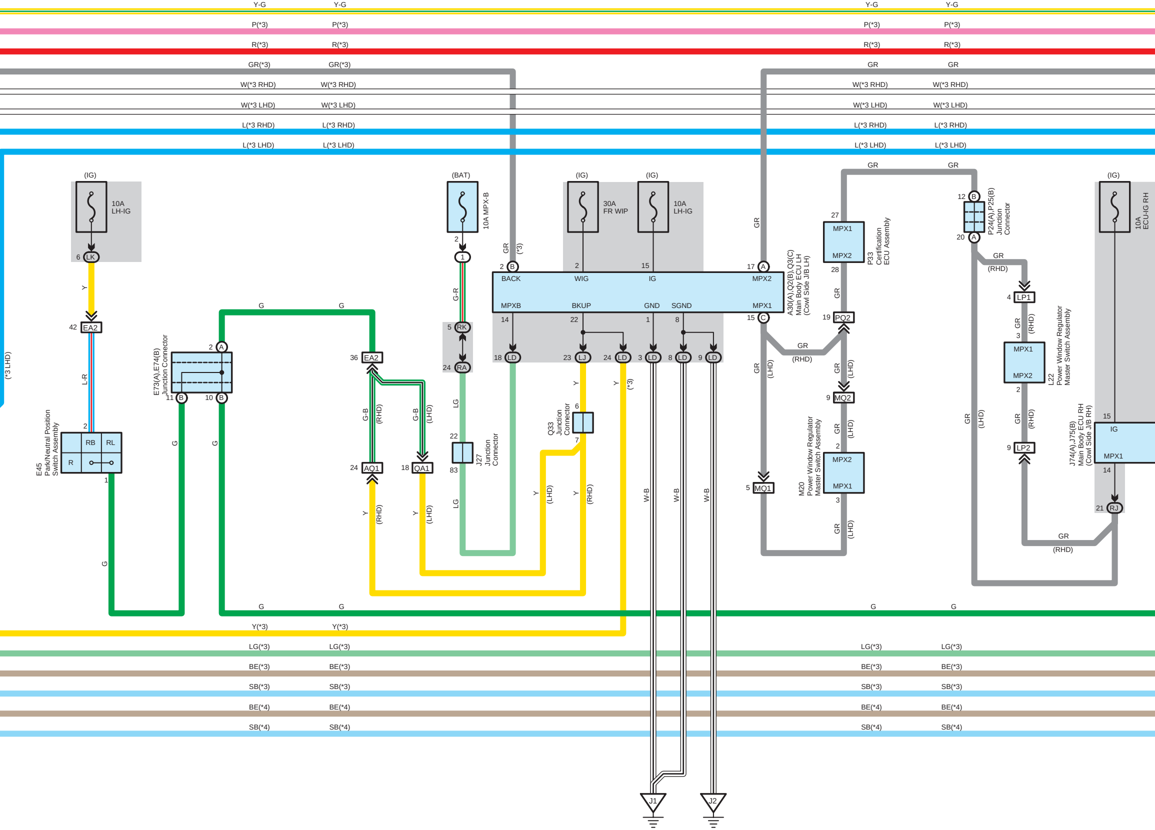
Y-G
P(*3)
R(*3)
GR(*3)
GR
W(*3 RHD)
W(*3 LHD)
L(*3 RHD)
L(*3 LHD)
(*3 LHD)
(IG)
10A
LH-IG
6 LK
Y
42 EA2
L-R
2
RB
RL
R
1
E45
Park/Neutral Position
Switch Assembly
G
E73(A),E74(B)
Junction Connector
2 A
11 B
10 B
36 EA2
G-B
(RHD)
(LHD)
24 AQ1
18 QA1
Y
(BAT)
10A MPX-B
2
1
G-R
5 RK
24 RA
LG
22
83
J27
Junction
Connector
GR
(*3)
2 B
(IG)
30A
FR WIP
15
BACK
WIG
IG
MPX2
MPXB
BKUP
GND
SGND
MPX1
14
22
1
8
17 A
15 C
18 LD
23 LJ
24 LD
3 LD
8 LD
9 LD
A30(A),Q2(B),Q3(C)
Main Body ECU LH
(Cowl Side J/B LH)
6
7
Q33
Junction
Connector
W-B
J1
J2
27
MPX1
MPX2
28
P33
Certification
ECU Assembly
19 PQ2
9 MQ2
5 MQ1
2
3
M20
Power Window Regulator
Master Switch Assembly
12 B
20 A
P24(A),P25(B)
Junction
Connector
4 LP1
L22
Power Window Regulator
Master Switch Assembly
9 LP2
10A
ECU-IG RH
15
IG
MPX1
14
21 RJ
J74(A),J75(B)
Main Body ECU RH
(Cowl Side J/B RH)
Y(*3)
LG(*3)
BE(*3)
SB(*3)
BE(*4)
SB(*4)

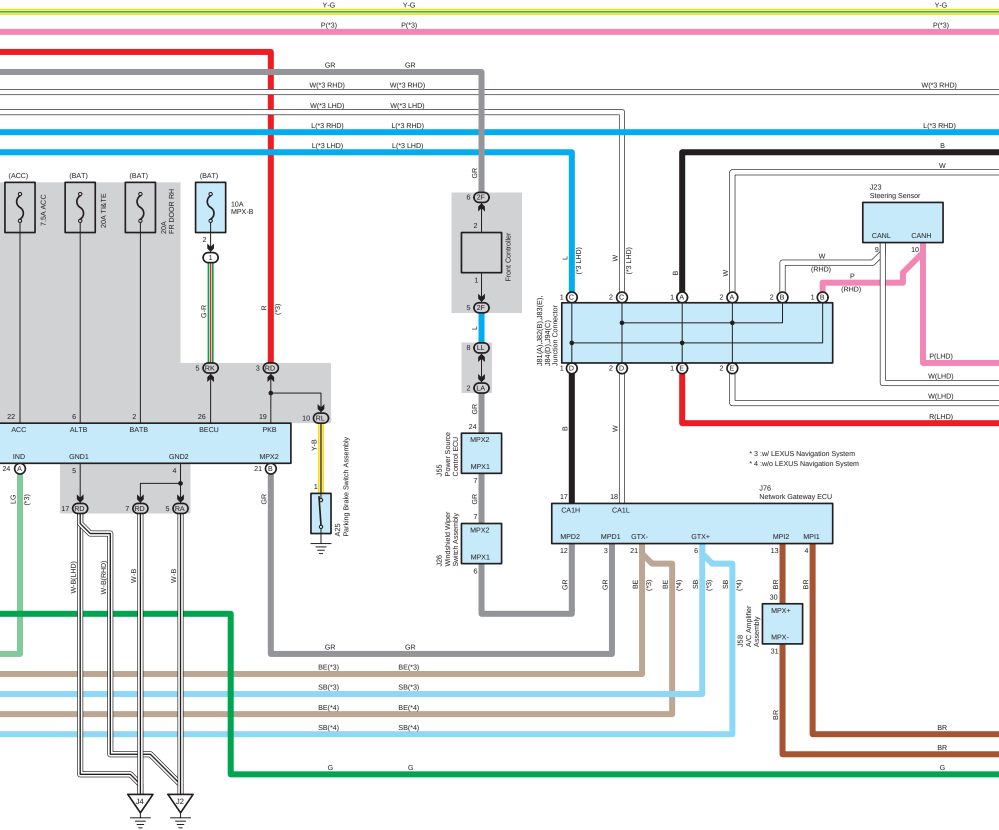

Y-G
Y-G
Y-G
P(*3)
P(*3)
P(*3)
GR
GR
W(*3 RHD)
W(*3 RHD)
W(*3 RHD)
W(*3 LHD)
W(*3 LHD)
L(*3 RHD)
L(*3 RHD)
L(*3 RHD)
L(*3 LHD)
L(*3 LHD)
B
W
(ACC)
(BAT)
(BAT)
(BAT)
7.5A ACC
20A TI&TE
20A FR DOOR RH
10A MPX-B
2
1
G-R
R
(*3)
5 RK
3 RD
10 RL
22
6
2
26
19
ACC
ALTB
BATB
BECU
PKB
IND
GND1
GND2
MPX2
24 A
5
4
21 B
LG
(*3)
17 RD
7 RD
5 RA
W-B(LHD)
W-B(RHD)
W-B
W-B
GR
J4
J2
Y-B
1
A25 Parking Brake Switch Assembly
GR
6 2F
2
Front Controller
1
5 2F
L
8 LL
2 LA
GR
24
MPX2
MPX1
J55 Power Source Control ECU
7
GR
7
MPX2
MPX1
J26 Windshield Wiper Switch Assembly
6
L
(*3 LHD)
W
(*3 LHD)
B
W
J81(A),J82(B),J83(E), J84(D),J94(C) Junction Connector
1 C
2 C
1 A
2 A
2 B
1 B
1 D
2 D
1 E
2 E
J23 Steering Sensor
CANL
CANH
9
10
W
(RHD)
P
(RHD)
P(LHD)
W(LHD)
W(LHD)
R(LHD)
B
W
17
18
J76 Network Gateway ECU
CA1H
CA1L
MPD2
MPD1
GTX-
GTX+
MPI2
MPI1
12
3
21
6
13
4
GR
GR
BE
(*3)
BE
(*4)
SB
(*3)
SB
(*4)
BR
BR
30
MPX+
MPX-
31
J58 A/C Amplifier Assembly
BR
GR
GR
BE(*3)
BE(*3)
SB(*3)
SB(*3)
BE(*4)
BE(*4)
SB(*4)
SB(*4)
BR
BR
G
G
G

* 3 :w/ LEXUS Navigation System
* 4 :w/o LEXUS Navigation System

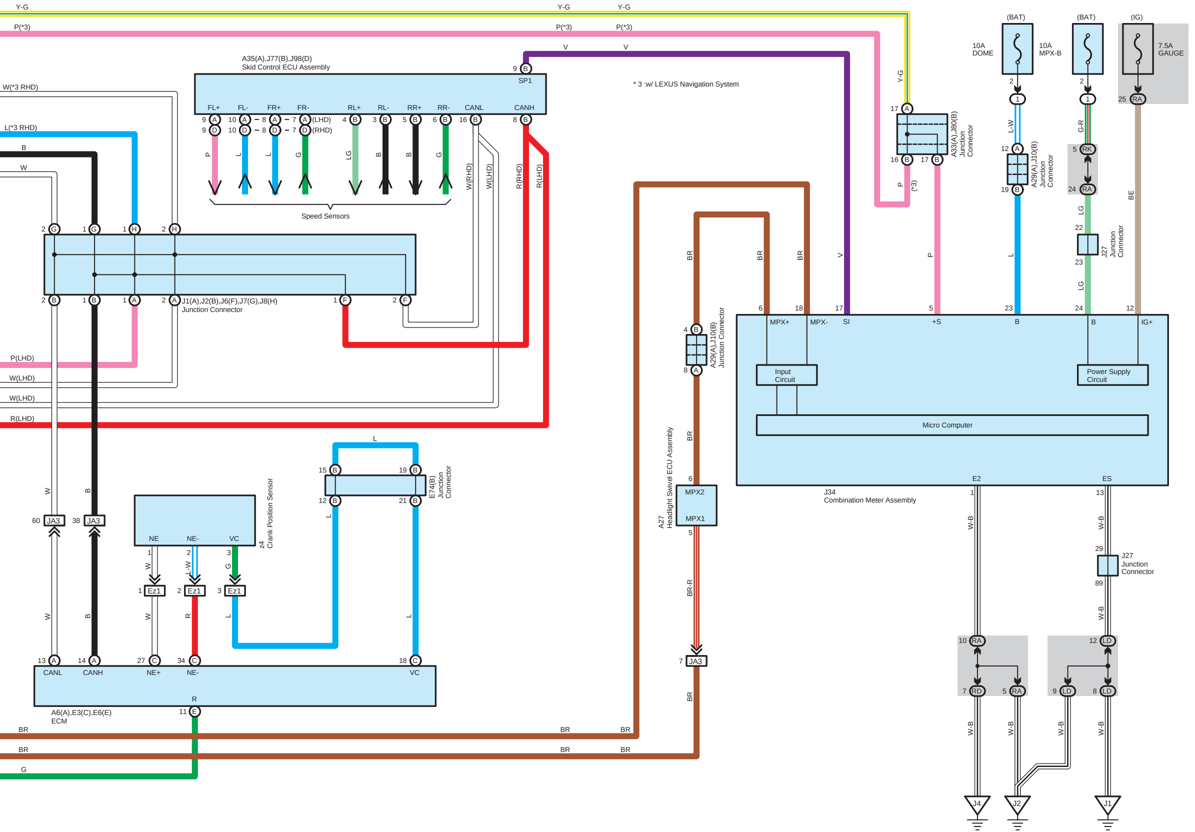

Y-G
P(*3)
Y-G
Y-G
P(*3)
P(*3)
V
V
* 3 :w/ LEXUS Navigation System
A35(A),J77(B),J98(D)
Skid Control ECU Assembly
SP1
FL+
FL-
FR+
FR-
RL+
RL-
RR+
RR-
CANL
CANH
(LHD)
(RHD)
Speed Sensors
W(*3 RHD)
L(*3 RHD)
B
W
W(RHD)
W(LHD)
R(RHD)
R(LHD)
J1(A),J2(B),J6(F),J7(G),J8(H)
Junction Connector
P(LHD)
W(LHD)
W(LHD)
R(LHD)
(BAT)
(BAT)
(IG)
10A
DOME
10A
MPX-B
7.5A
GAUGE
A33(A),J80(B)
Junction
Connector
A29(A),J10(B)
Junction
Connector
J27
Junction
Connector
L-W
G-R
LG
BE
(*3)
BR
V
P
L
MPX+
MPX-
SI
+S
B
B
IG+
Input
Circuit
Power Supply
Circuit
Micro Computer
E2
ES
J34
Combination Meter Assembly
A29(A),J10(B)
Junction Connector
A27
Headlight Swivel ECU Assembly
MPX2
MPX1
BR-R
JA3
W-B
J27
Junction
Connector
J4
J2
J1
E74(B)
Junction
Connector
z4
Crank Position Sensor
NE
NE-
VC
Ez1
CANL
CANH
NE+
NE-
VC
R
A6(A),E3(C),E6(E)
ECM
BR
BR
G