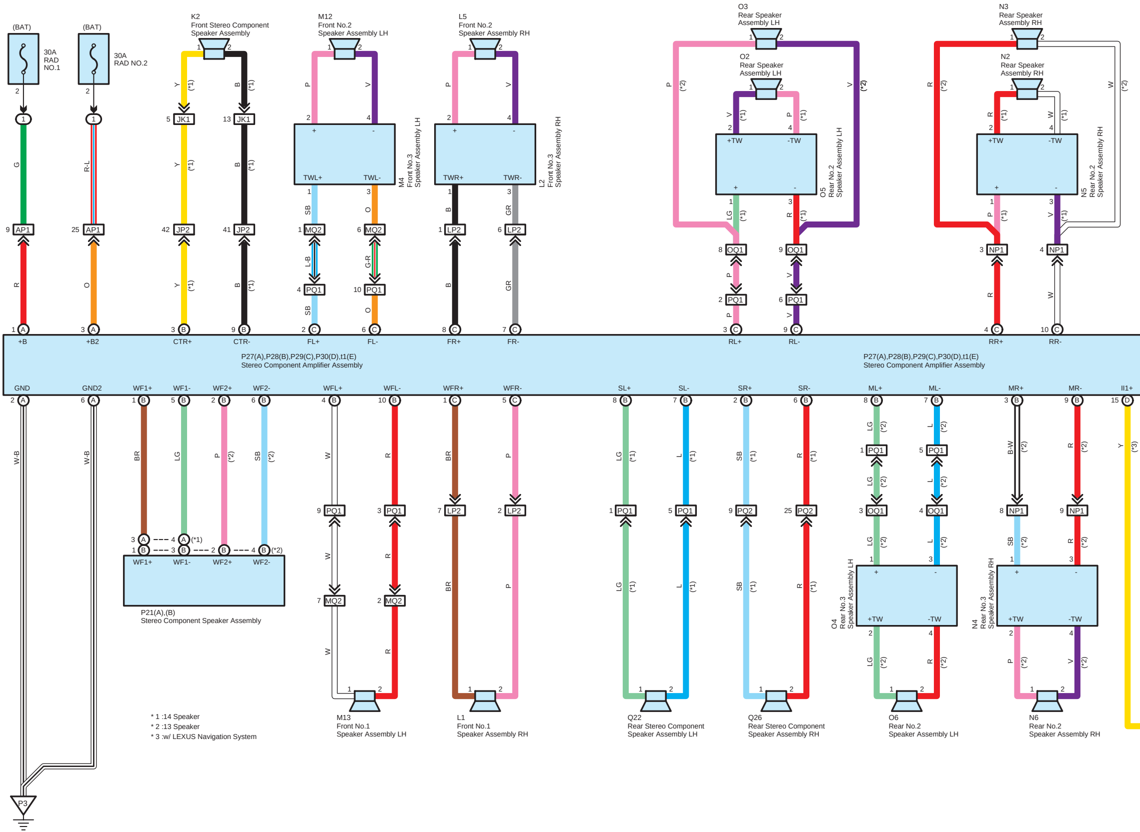
(BAT)
30A RAD NO.1
(BAT)
30A RAD NO.2
K2 Front Stereo Component Speaker Assembly
M12 Front No.2 Speaker Assembly LH
L5 Front No.2 Speaker Assembly RH
O3 Rear Speaker Assembly LH
O2 Rear Speaker Assembly LH
N3 Rear Speaker Assembly RH
N2 Rear Speaker Assembly RH
M4 Front No.3 Speaker Assembly LH
L2 Front No.3 Speaker Assembly RH
O5 Rear No.2 Speaker Assembly LH
N5 Rear No.2 Speaker Assembly RH
TWL+
TWL-
TWR+
TWR-
+TW
-TW
AP1
JK1
JP2
MQ2
PQ1
LP2
OQ1
NP1
PQ2
+B
+B2
CTR+
CTR-
FL+
FL-
FR+
FR-
RL+
RL-
RR+
RR-
P27(A),P28(B),P29(C),P30(D),t1(E)
Stereo Component Amplifier Assembly
GND
GND2
WF1+
WF1-
WF2+
WF2-
WFL+
WFL-
WFR+
WFR-
SL+
SL-
SR+
SR-
ML+
ML-
MR+
MR-
II1+
P21(A),(B)
Stereo Component Speaker Assembly
M13 Front No.1 Speaker Assembly LH
L1 Front No.1 Speaker Assembly RH
Q22 Rear Stereo Component Speaker Assembly LH
Q26 Rear Stereo Component Speaker Assembly RH
O4 Rear No.3 Speaker Assembly LH
N4 Rear No.3 Speaker Assembly RH
O6 Rear No.2 Speaker Assembly LH
N6 Rear No.2 Speaker Assembly RH
P3
G
R-L
Y
B
P
V
SB
O
L-B
G-R
GR
LG
R
W
BR
L
B-W
W-B
(*1)
(*2)
(*3)

* 1 :14 Speaker
* 2 :13 Speaker
* 3 :w/ LEXUS Navigation System

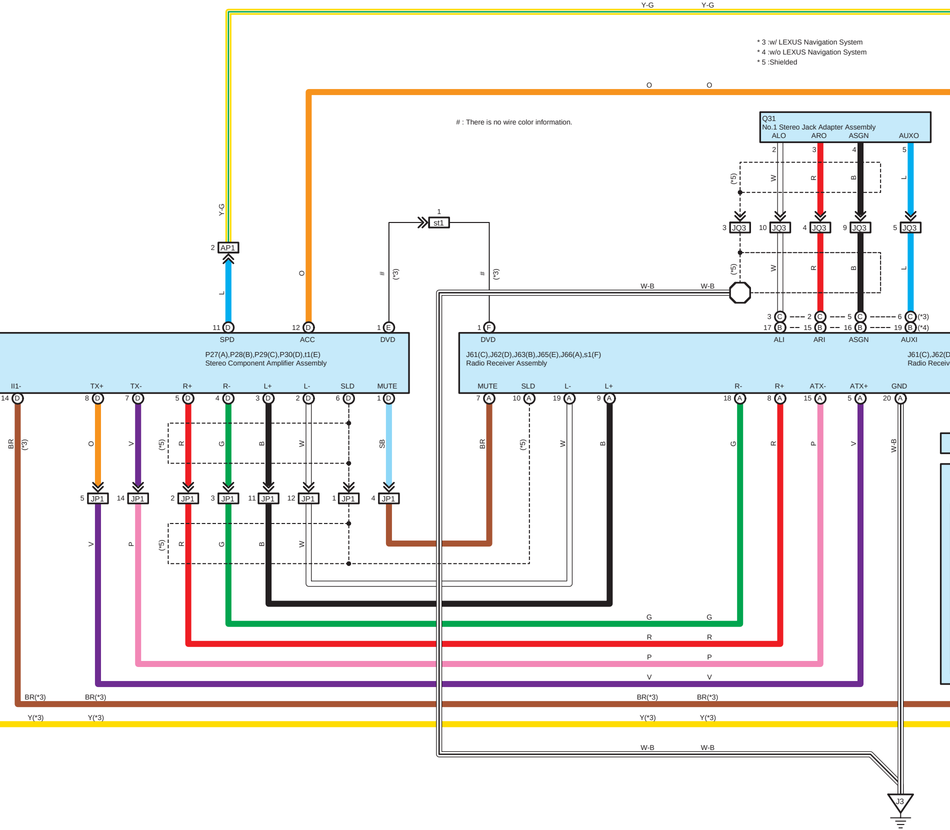
Y-G
O
Q31
No.1 Stereo Jack Adapter Assembly
ALO
ARO
ASGN
AUXO
AP1
st1
JQ3
JP1
(*5)
(*3)
SPD
ACC
DVD
P27(A),P28(B),P29(C),P30(D),t1(E)
Stereo Component Amplifier Assembly
II1-
TX+
TX-
R+
R-
L+
L-
SLD
MUTE
J61(C),J62(D),J63(B),J65(E),J66(A),s1(F)
Radio Receiver Assembly
ALI
ARI
AUXI
ATX-
ATX+
GND
J61(C),J62(D
Radio Receiv
W-B
BR(*3)
Y(*3)
BR
SB
G
R
P
V
W
B
L
J3

* 3 :w/ LEXUS Navigation System
* 4 :w/o LEXUS Navigation System
* 5 :Shielded

: There is no wire color information.

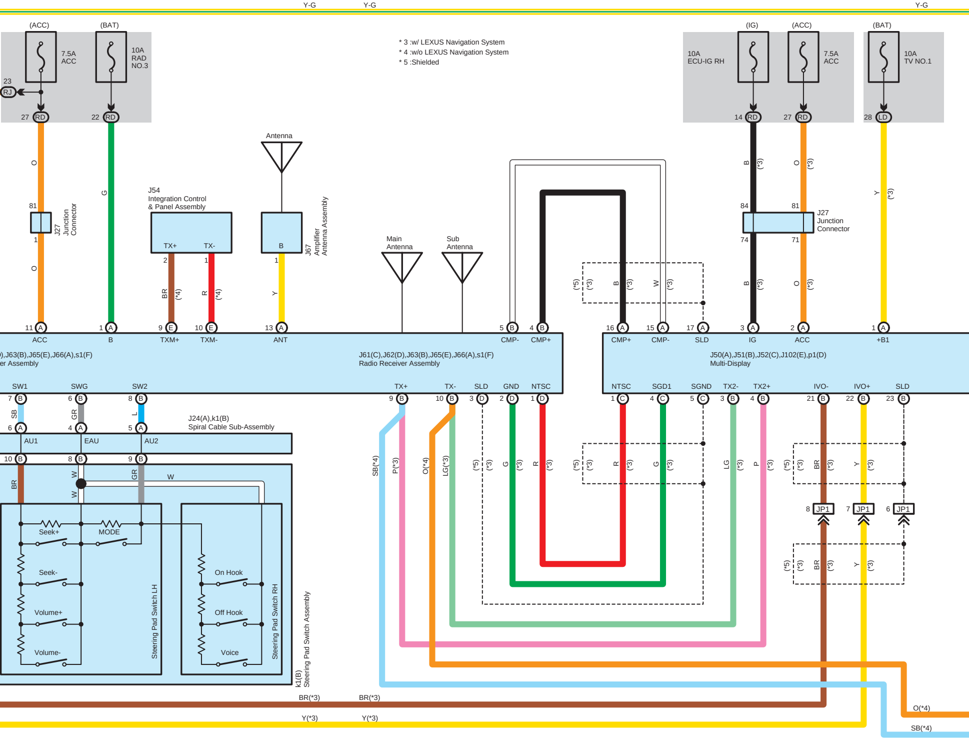

Y-G
Y-G
Y-G
(ACC)
7.5A
ACC
(BAT)
10A
RAD
NO.3
23
RJ
27
RD
22
RD
* 3 :w/ LEXUS Navigation System
* 4 :w/o LEXUS Navigation System
* 5 :Shielded
(IG)
10A
ECU-IG RH
(ACC)
7.5A
ACC
(BAT)
10A
TV NO.1
14
RD
27
RD
28
LD
O
G
81
J27
Junction
Connector
1
O
J54
Integration Control
& Panel Assembly
TX+
TX-
2
1
BR
(*4)
R
(*4)
Antenna
B
1
Y
J67
Amplifier
Antenna Assembly
Main
Antenna
Sub
Antenna
B
(*3)
O
(*3)
Y
(*3)
84
81
J27
Junction
Connector
74
71
(*5)
(*3)
B
(*3)
W
(*3)
11 A
ACC
1 A
B
9 E
TXM+
10 E
TXM-
13 A
ANT
5 B
CMP-
4 B
CMP+
16 A
CMP+
15 A
CMP-
17 A
SLD
3 A
IG
2 A
ACC
1 A
+B1
),J63(B),J65(E),J66(A),s1(F)
er Assembly
J61(C),J62(D),J63(B),J65(E),J66(A),s1(F)
Radio Receiver Assembly
J50(A),J51(B),J52(C),J102(E),p1(D)
Multi-Display
SW1
SWG
SW2
7 B
6 B
8 B
TX+
TX-
SLD
GND
NTSC
9 B
10 B
3 D
2 D
1 D
NTSC
SGD1
SGND
TX2-
TX2+
IVO-
IVO+
SLD
1 C
4 C
5 C
3 B
4 B
21 B
22 B
23 B
SB
GR
L
6 A
4 A
5 A
J24(A),k1(B)
Spiral Cable Sub-Assembly
AU1
EAU
AU2
10 B
8 B
9 B
BR
W
W
GR
W
SB(*4)
P(*3)
O(*4)
LG(*3)
(*5)
(*3)
G
(*3)
R
(*3)
(*5)
(*3)
R
(*3)
G
(*3)
LG
(*3)
P
(*3)
(*5)
(*3)
BR
(*3)
Y
(*3)
8 JP1
7 JP1
6 JP1
(*5)
(*3)
BR
(*3)
Y
(*3)
Seek+
MODE
Seek-
Volume+
Volume-
Steering Pad Switch LH
On Hook
Off Hook
Voice
Steering Pad Switch RH
k1(B)
Steering Pad Switch Assembly
BR(*3)
BR(*3)
Y(*3)
Y(*3)
O(*4)
SB(*4)

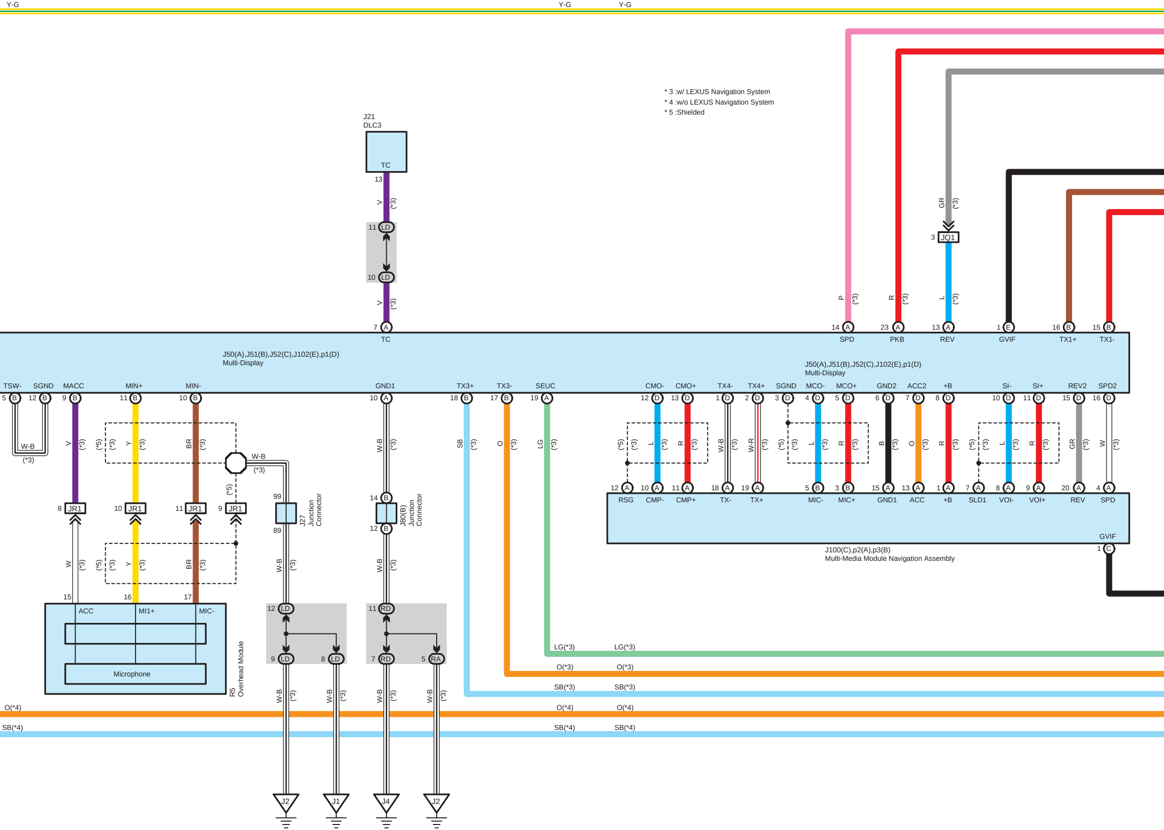
Y-G
Y-G
Y-G
J21
DLC3
TC
13
V
(*3)
11
LD
10
LD
7
A
TC
J50(A),J51(B),J52(C),J102(E),p1(D)
Multi-Display
TSW-
SGND
MACC
MIN+
MIN-
GND1
TX3+
TX3-
SEUC
SPD
PKB
REV
GVIF
TX1+
TX1-
P
R
GR
L
3
JQ1
14
23
13
1
16
15
J50(A),J51(B),J52(C),J102(E),p1(D)
Multi-Display
CMO-
CMO+
TX4-
TX4+
SGND
MCO-
MCO+
GND2
ACC2
+B
SI-
SI+
REV2
SPD2
W-B
(*3)
V
(*5)
Y
BR
W-B
(*3)
(*5)
8 JR1
10 JR1
11 JR1
9 JR1
99
89
J27
Junction Connector
14
12
J80(B)
Junction Connector
W
15
16
17
ACC
MI1+
MIC-
Microphone
R5
Overhead Module
SB
O
LG
W-R
B
RSG
CMP-
CMP+
TX-
TX+
MIC-
MIC+
GND1
ACC
+B
SLD1
VOI-
VOI+
REV
SPD
GVIF
J100(C),p2(A),p3(B)
Multi-Media Module Navigation Assembly
12 LD
9 LD
8 LD
11 RD
7 RD
5 RA
LG(*3)
O(*3)
SB(*3)
O(*4)
SB(*4)
J2
J1
J4
J2

* 3 :w/ LEXUS Navigation System
* 4 :w/o LEXUS Navigation System
* 5 :Shielded

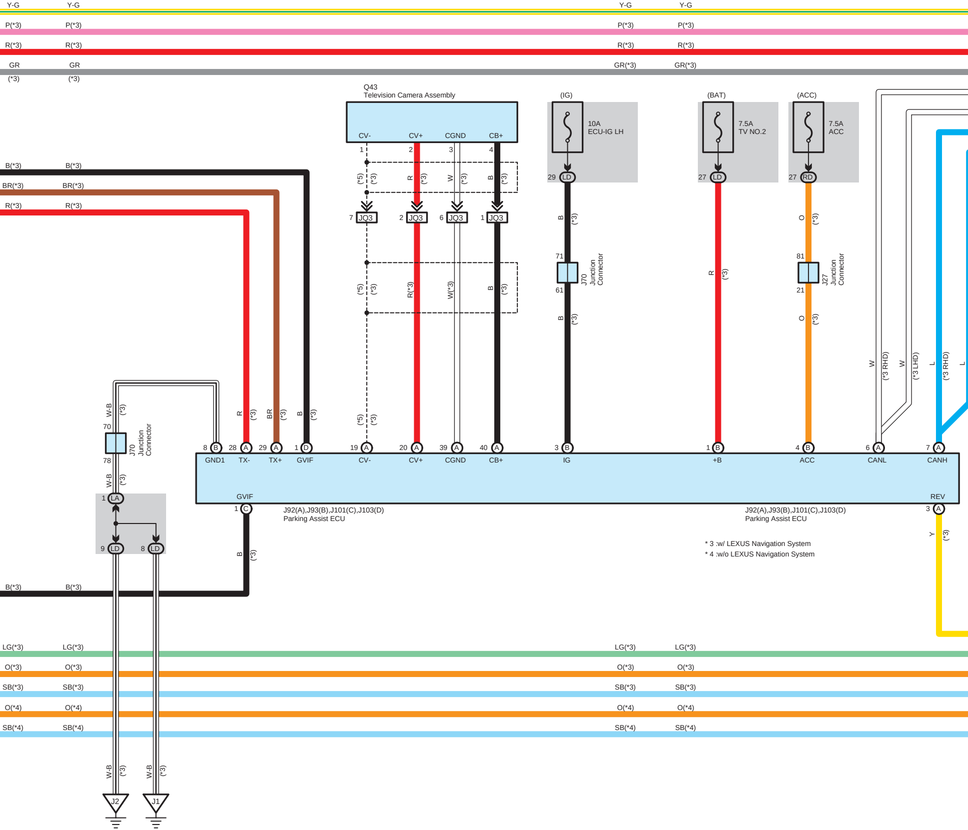
Y-G
P(*3)
R(*3)
GR
(*3)
GR(*3)
Q43
Television Camera Assembly
CV-
CV+
CGND
CB+
(IG)
10A
ECU-IG LH
(BAT)
7.5A
TV NO.2
(ACC)
7.5A
ACC
B(*3)
BR(*3)
R(*3)
JQ3
(*5)
(*3)
R
W
B
R(*3)
W(*3)
LD
RD
O
71
61
J70
Junction
Connector
81
21
J27
Junction
Connector
W
(*3 RHD)
(*3 LHD)
L
W-B
70
78
GND1
TX-
TX+
GVIF
CV-
CV+
CGND
CB+
IG
+B
ACC
CANL
CANH
REV
LA
J92(A),J93(B),J101(C),J103(D)
Parking Assist ECU
Y
* 3 :w/ LEXUS Navigation System
* 4 :w/o LEXUS Navigation System
LG(*3)
O(*3)
SB(*3)
O(*4)
SB(*4)
J2
J1

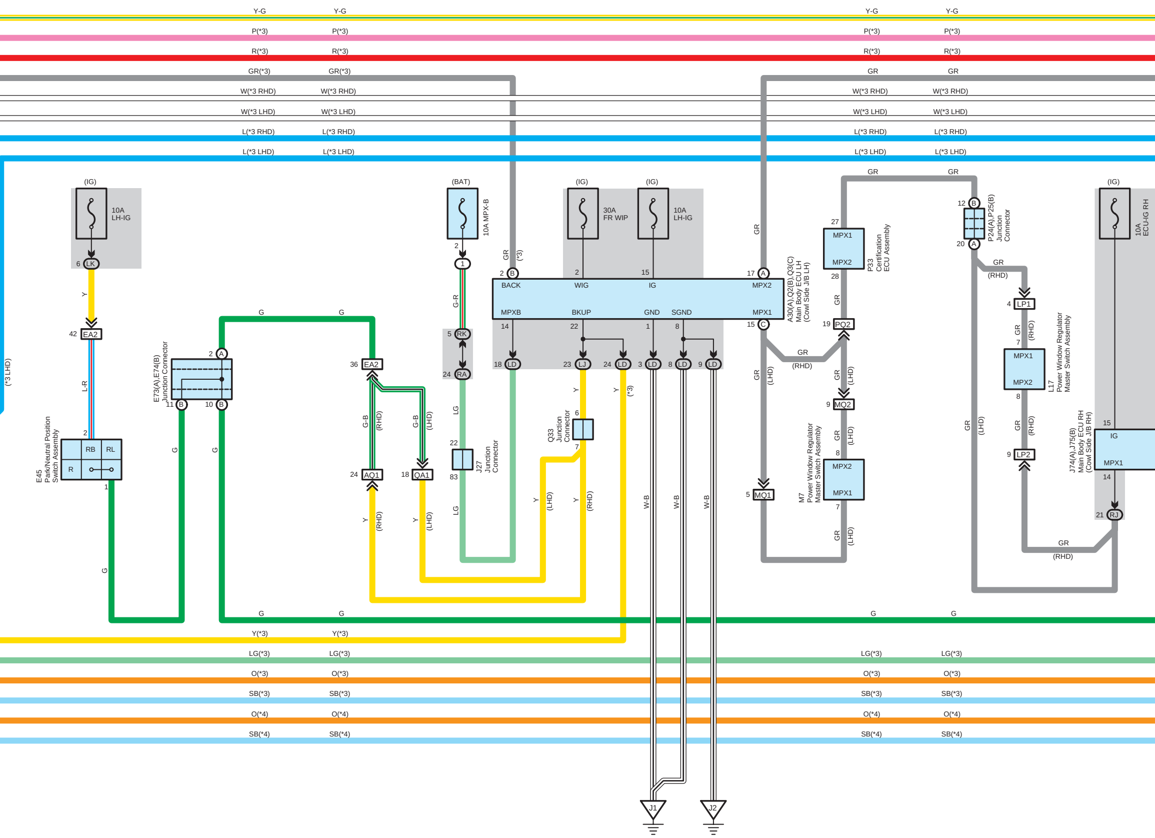
Y-G
P(*3)
R(*3)
GR(*3)
GR
W(*3 RHD)
W(*3 LHD)
L(*3 RHD)
L(*3 LHD)
(*3 LHD)
(IG)
10A LH-IG
6 LK
Y
42 EA2
L-R
2
RB
RL
R
1
E45 Park/Neutral Position Switch Assembly
G
2 A
11 B
10 B
E73(A),E74(B) Junction Connector
36 EA2
G-B
(RHD)
(LHD)
24 AQ1
18 QA1
Y
(BAT)
10A MPX-B
2
1
G-R
5 RK
24 RA
LG
22
83
J27 Junction Connector
(*3)
2 B
BACK
WIG
IG
MPX2
MPXB
BKUP
GND
SGND
MPX1
14
22
1
8
15 C
17 A
18 LD
23 LJ
24 LD
3 LD
8 LD
9 LD
(IG)
30A FR WIP
10A LH-IG
2
15
A30(A),Q2(B),Q3(C) Main Body ECU LH (Cowl Side J/B LH)
6
7
Q33 Junction Connector
W-B
J1
J2
27
MPX1
MPX2
28
P33 Certification ECU Assembly
19 PQ2
9 MQ2
8
MPX2
MPX1
7
M7 Power Window Regulator Master Switch Assembly
5 MQ1
12 B
20 A
P24(A),P25(B) Junction Connector
4 LP1
7
MPX1
MPX2
8
L17 Power Window Regulator Master Switch Assembly
9 LP2
(IG)
10A ECU-IG RH
15
IG
MPX1
14
21 RJ
J74(A),J75(B) Main Body ECU RH (Cowl Side J/B RH)
Y(*3)
LG(*3)
O(*3)
SB(*3)
O(*4)
SB(*4)

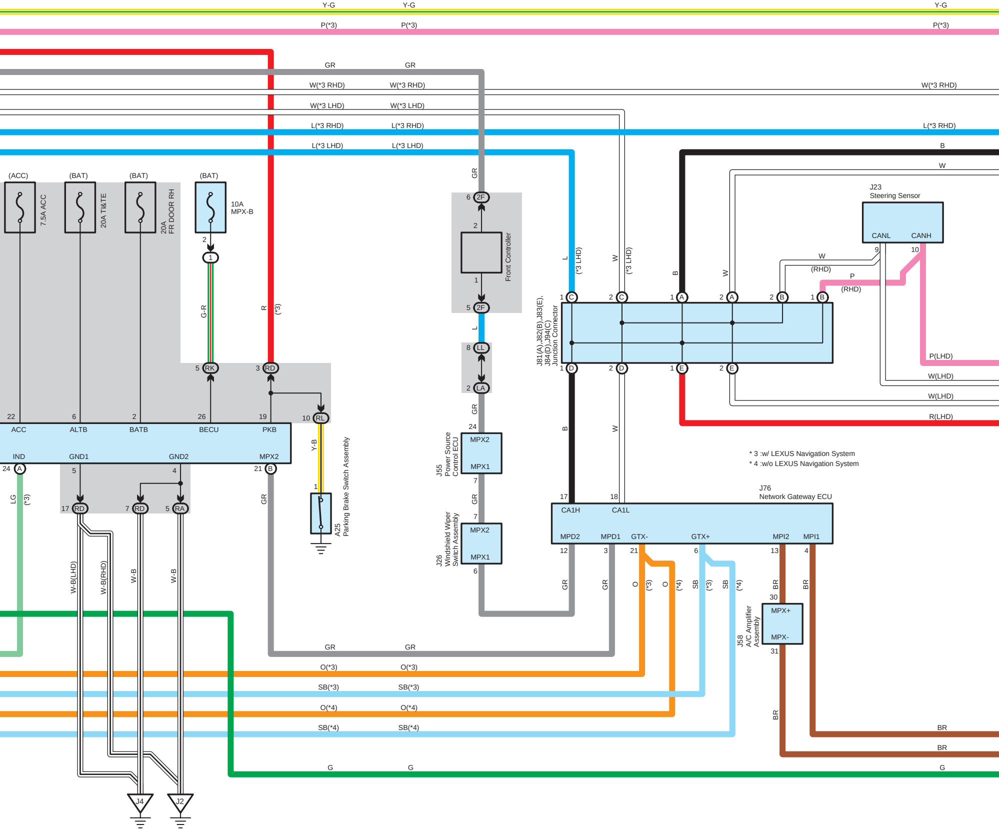
Y-G
P(*3)
GR
W(*3 RHD)
W(*3 LHD)
L(*3 RHD)
L(*3 LHD)
B
W
(ACC)
(BAT)
(BAT)
(BAT)
7.5A ACC
20A TI&TE
20A FR DOOR RH
10A MPX-B
G-R
R
(*3)
RK
RD
RL
22 ACC
6 ALTB
2 BATB
26 BECU
19 PKB
IND
GND1
GND2
MPX2
24 A
21 B
LG
(*3)
17 RD
7 RD
5 RA
W-B(LHD)
W-B(RHD)
W-B
W-B
J4
J2
Y-B
A25 Parking Brake Switch Assembly
GR
2F
Front Controller
L
LL
LA
J55 Power Source Control ECU
MPX2
MPX1
J26 Windshield Wiper Switch Assembly
MPX2
MPX1
J81(A),J82(B),J83(E), J84(D),J94(C) Junction Connector
(*3 LHD)
J23 Steering Sensor
CANL
CANH
(RHD)
P
P(LHD)
W(LHD)
W(LHD)
R(LHD)
J76 Network Gateway ECU
CA1H
CA1L
MPD2
MPD1
GTX-
GTX+
MPI2
MPI1
O
SB
BR
(*4)
J58 A/C Amplifier Assembly
MPX+
MPX-
GR
O(*3)
SB(*3)
O(*4)
SB(*4)
BR
G

* 3 :w/ LEXUS Navigation System
* 4 :w/o LEXUS Navigation System

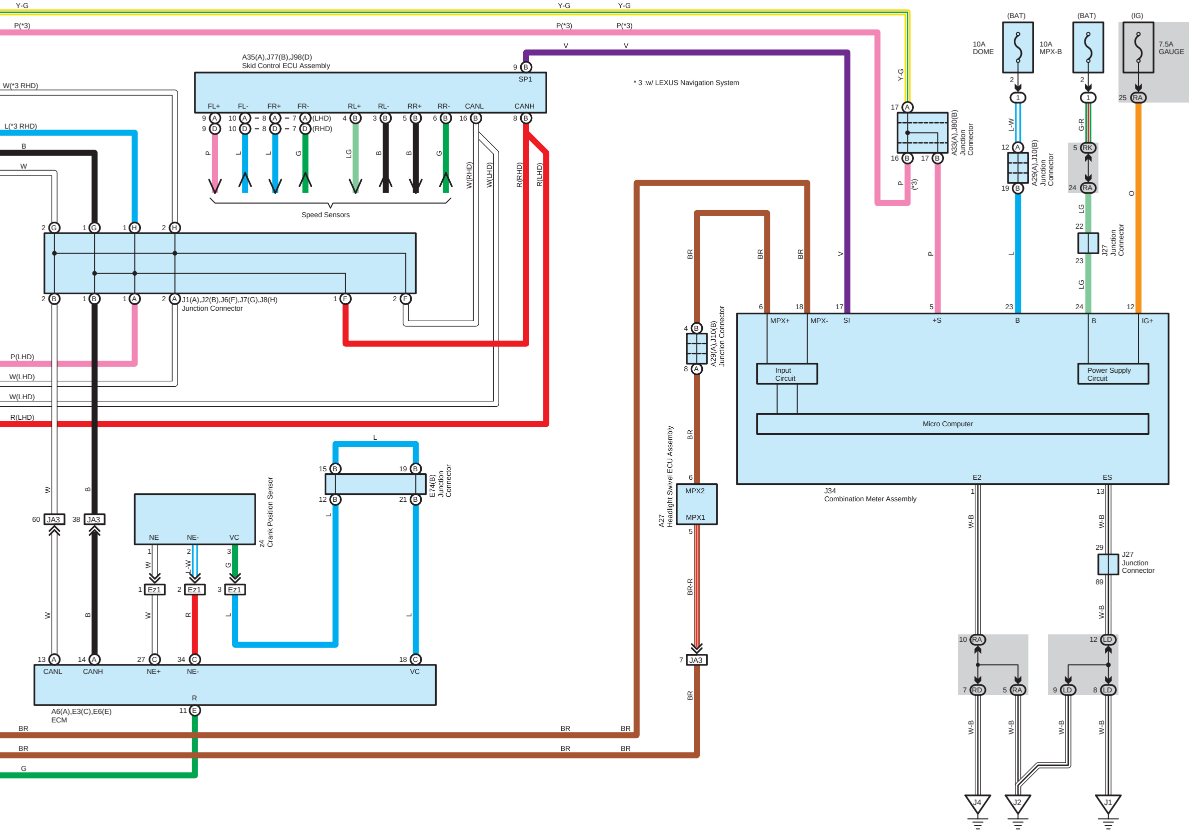
Y-G
P(*3)
V
A35(A),J77(B),J98(D)
Skid Control ECU Assembly
SP1
FL+
FL-
FR+
FR-
RL+
RL-
RR+
RR-
CANL
CANH
(LHD)
(RHD)
Speed Sensors
* 3 :w/ LEXUS Navigation System
W(*3 RHD)
L(*3 RHD)
B
W
P
L
G
LG
W(RHD)
W(LHD)
R(RHD)
R(LHD)
J1(A),J2(B),J6(F),J7(G),J8(H)
Junction Connector
P(LHD)
W(LHD)
R(LHD)
A33(A),J80(B)
Junction Connector
(*3)
(BAT)
(IG)
10A DOME
10A MPX-B
7.5A GAUGE
L-W
G-R
A29(A),J10(B)
Junction Connector
LG
O
J27
Junction Connector
BR
MPX+
MPX-
SI
+S
B
IG+
Input Circuit
Power Supply Circuit
Micro Computer
E2
ES
J34
Combination Meter Assembly
A29(A),J10(B)
Junction Connector
A27
Headlight Swivel ECU Assembly
MPX2
MPX1
BR-R
JA3
W-B
J27
Junction Connector
RA
RD
LD
RK
J4
J2
J1
L
E74(B)
Junction Connector
z4
Crank Position Sensor
NE
NE-
VC
Ez1
R
NE+
A6(A),E3(C),E6(E)
ECM
BR
G