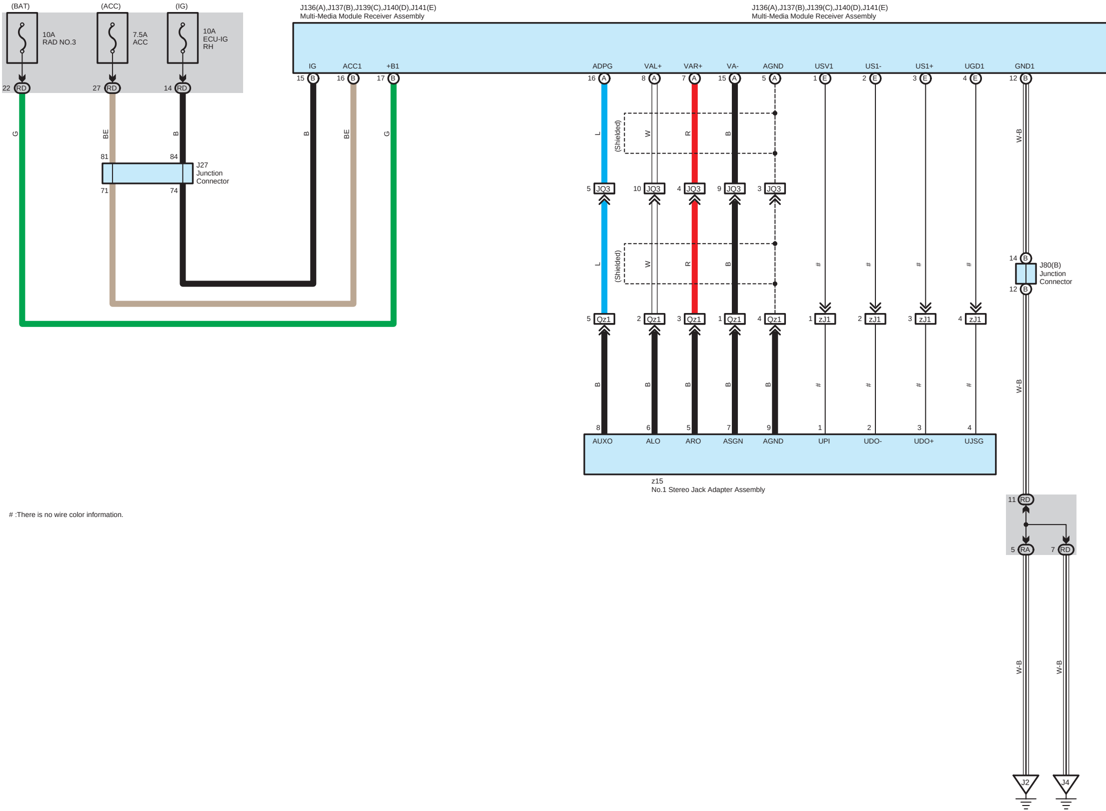
(BAT)
(ACC)
(IG)
10A
RAD NO.3
7.5A
ACC
10A
ECU-IG
RH
22 RD
27 RD
14 RD
G
BE
B
81
84
71
74
J27
Junction
Connector
J136(A),J137(B),J139(C),J140(D),J141(E)
Multi-Media Module Receiver Assembly
J136(A),J137(B),J139(C),J140(D),J141(E)
Multi-Media Module Receiver Assembly
IG
ACC1
+B1
15 B
16 B
17 B
B
BE
G
ADPG
VAL+
VAR+
VA-
AGND
USV1
US1-
US1+
UGD1
GND1
16 A
8 A
7 A
15 A
5 A
1 E
2 E
3 E
4 E
12 B
L
(Shielded)
W
R
B
W-B
5 JQ3
10 JQ3
4 JQ3
9 JQ3
3 JQ3
L
(Shielded)
W
R
B
#
#
#
#
14 B
J80(B)
Junction
Connector
12 B
5 Qz1
2 Qz1
3 Qz1
1 Qz1
4 Qz1
1 zJ1
2 zJ1
3 zJ1
4 zJ1
B
B
B
B
B
#
#
#
#
W-B
8
6
5
7
9
1
2
3
4
AUXO
ALO
ARO
ASGN
AGND
UPI
UDO-
UDO+
UJSG
z15
No.1 Stereo Jack Adapter Assembly
11 RD
5 RA
7 RD
W-B
W-B
J2
J4

# :There is no wire color information.

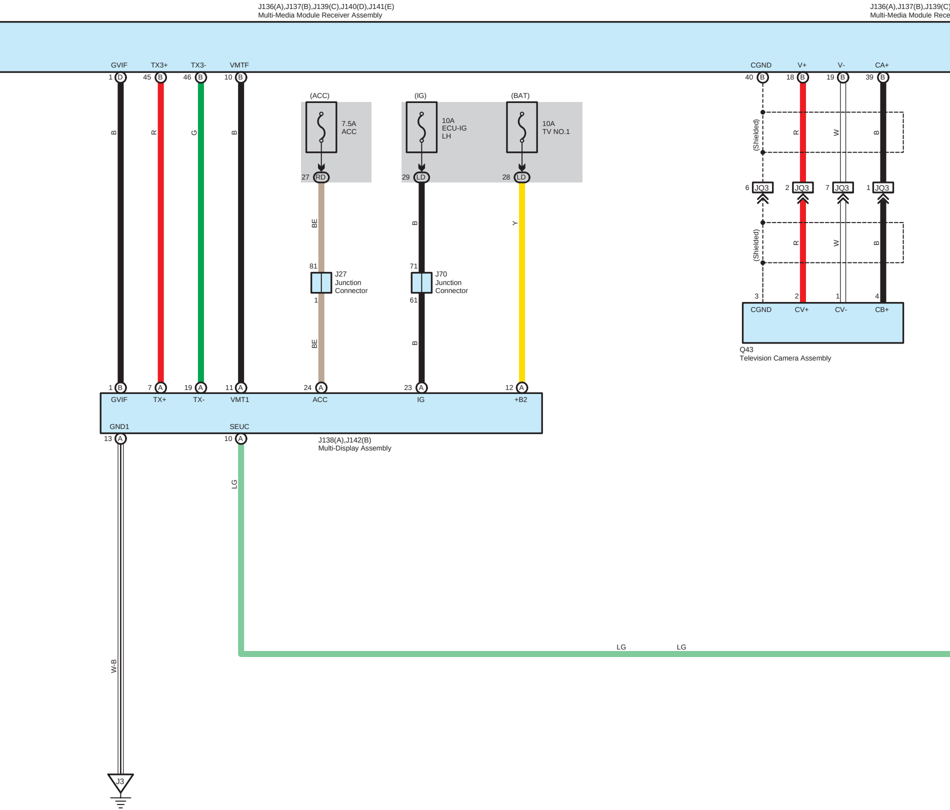
J136(A),J137(B),J139(C),J140(D),J141(E)
Multi-Media Module Receiver Assembly
J136(A),J137(B),J139(C)
Multi-Media Module Rece
GVIF
TX3+
TX3-
VMTF
1 D
45 B
46 B
10 B
B
R
G
B
(ACC)
7.5A
ACC
27 RD
BE
81
J27
Junction
Connector
1
BE
(IG)
10A
ECU-IG
LH
29 LD
B
71
J70
Junction
Connector
61
B
(BAT)
10A
TV NO.1
28 LD
Y
CGND
V+
V-
CA+
40 B
18 B
19 B
39 B
(Shielded)
R
W
B
6 JO3
2 JO3
7 JO3
1 JO3
(Shielded)
R
W
B
3
2
1
4
CGND
CV+
CV-
CB+
Q43
Television Camera Assembly
1 B
7 A
19 A
11 A
24 A
23 A
12 A
GVIF
TX+
TX-
VMT1
ACC
IG
+B2
GND1
SEUC
13 A
10 A
J138(A),J142(B)
Multi-Display Assembly
LG
LG
LG
W-B
J3

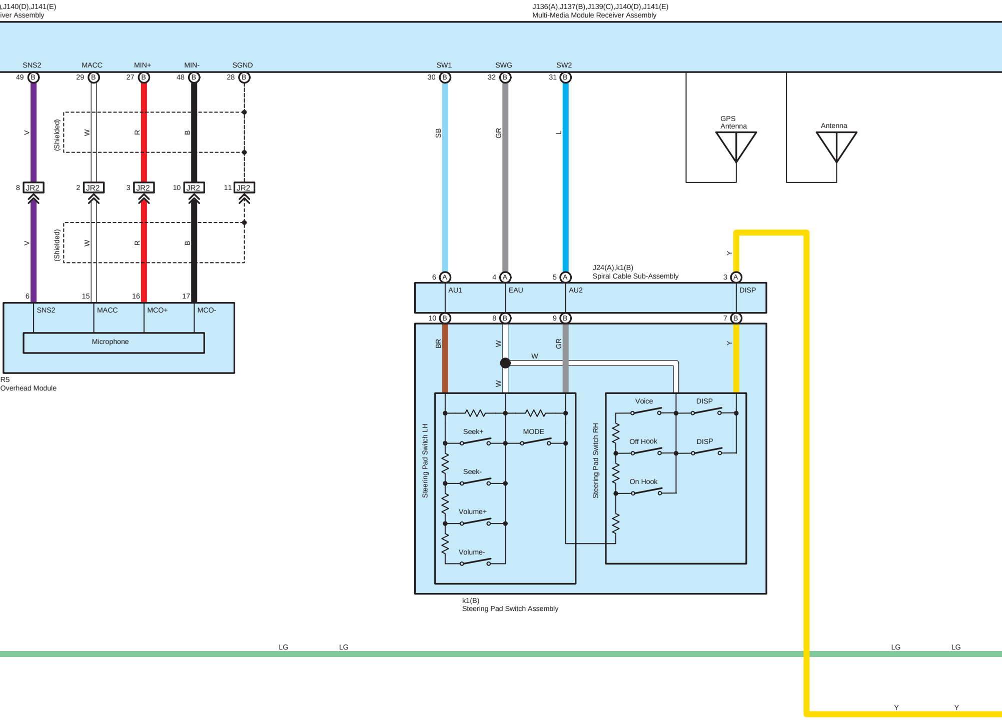
),J140(D),J141(E)
iver Assembly
J136(A),J137(B),J139(C),J140(D),J141(E)
Multi-Media Module Receiver Assembly
SNS2
MACC
MIN+
MIN-
SGND
49 B
29 B
27 B
48 B
28 B
SW1
SWG
SW2
30 B
32 B
31 B
V
W
R
B
(Shielded)
SB
GR
L
GPS Antenna
Antenna
8 JR2
2 JR2
3 JR2
10 JR2
11 JR2
V
W
R
B
(Shielded)
Y
J24(A),k1(B)
Spiral Cable Sub-Assembly
6 A
4 A
5 A
3 A
AU1
EAU
AU2
DISP
10 B
8 B
9 B
7 B
6
15
16
17
SNS2
MACC
MCO+
MCO-
Microphone
R5
Overhead Module
BR
W
GR
Y
W
W
Steering Pad Switch LH
Seek+
MODE
Seek-
Volume+
Volume-
Steering Pad Switch RH
Voice
DISP
Off Hook
DISP
On Hook
k1(B)
Steering Pad Switch Assembly
LG
LG
LG
LG
Y
Y

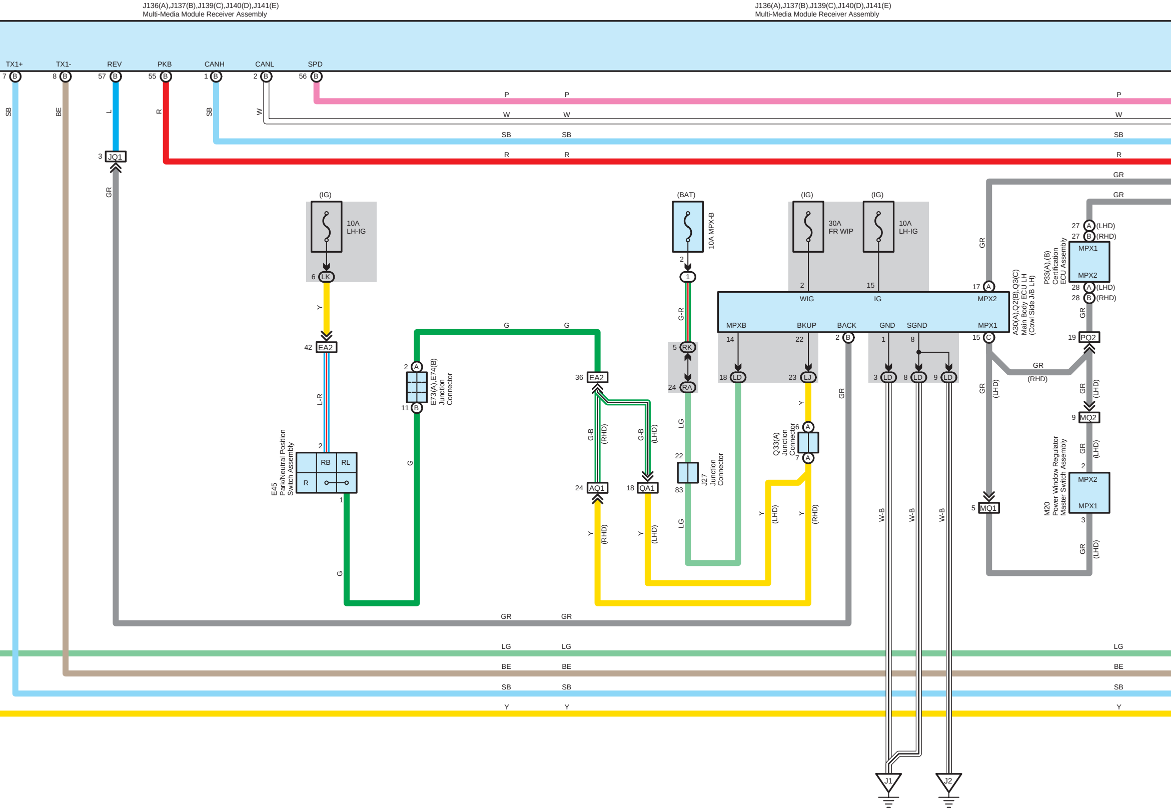
J136(A),J137(B),J139(C),J140(D),J141(E)
Multi-Media Module Receiver Assembly
J136(A),J137(B),J139(C),J140(D),J141(E)
Multi-Media Module Receiver Assembly
TX1+
TX1-
REV
PKB
CANH
CANL
SPD
7 B
8 B
57 B
55 B
1 B
2 B
56 B
SB
BE
L
R
SB
W
P
W
SB
R
3 JO1
GR
(IG)
10A LH-IG
6 LK
Y
42 EA2
L-R
2
RB
RL
R
1
E45 Park/Neutral Position Switch Assembly
G
2 A
11 B
E73(A),E74(B) Junction Connector
G
36 EA2
G-B
(RHD)
G-B
(LHD)
24 AQ1
18 QA1
Y
(RHD)
Y
(LHD)
(BAT)
10A MPX-B
2
1
G-R
5 RK
24 RA
LG
22
83
J27 Junction Connector
LG
(IG)
30A FR WIP
(IG)
10A LH-IG
2
15
WIG
IG
MPX2
17 A
MPXB
BKUP
BACK
GND
SGND
MPX1
14
22
2 B
1
8
15 C
18 LD
23 LJ
3 LD
8 LD
9 LD
A30(A),Q2(B),Q3(C) Main Body ECU LH (Cowl Side J/B LH)
Y
6 A
7 A
Q33(A) Junction Connector
Y
(LHD)
Y
(RHD)
GR
W-B
W-B
W-B
J1
J2
GR
GR
GR
27 A (LHD)
27 B (RHD)
MPX1
MPX2
P33(A),(B) Certification ECU Assembly
28 A (LHD)
28 B (RHD)
GR
19 PQ2
GR
(RHD)
GR
(LHD)
GR
(LHD)
9 MQ2
GR
(LHD)
2
MPX2
MPX1
3
M20 Power Window Regulator Master Switch Assembly
GR
(LHD)
5 MQ1
GR
GR
LG
LG
LG
BE
BE
BE
SB
SB
SB
Y
Y
Y

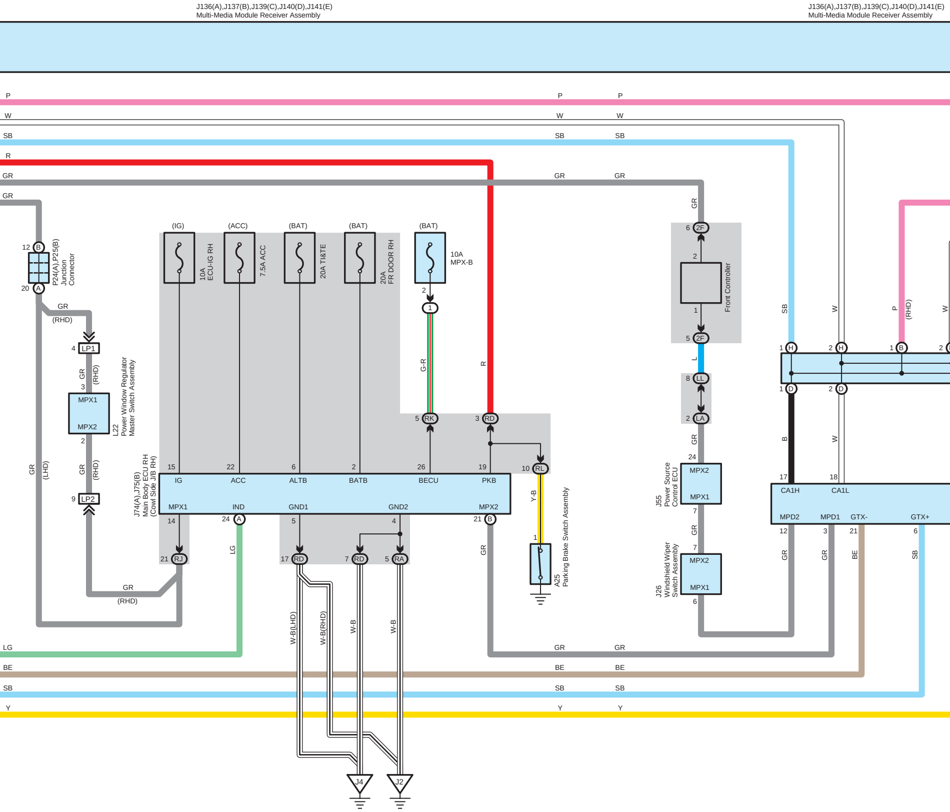
J136(A),J137(B),J139(C),J140(D),J141(E)
Multi-Media Module Receiver Assembly
J136(A),J137(B),J139(C),J140(D),J141(E)
Multi-Media Module Receiver Assembly
P
W
SB
R
GR
GR
12 B
20 A
P24(A),P25(B) Junction Connector
GR
(RHD)
4 LP1
GR (RHD)
3
MPX1
MPX2
2
L22 Power Window Regulator Master Switch Assembly
GR (RHD)
9 LP2
GR
(RHD)
GR (LHD)
(IG)
(ACC)
(BAT)
(BAT)
(BAT)
10A ECU-IG RH
7.5A ACC
20A TI&TE
20A FR DOOR RH
10A MPX-B
2
1
G-R
R
5 RK
3 RD
15 IG
22 ACC
6 ALTB
2 BATB
26 BECU
19 PKB
10 RL
MPX1
IND
GND1
GND2
MPX2
J74(A),J75(B) Main Body ECU RH (Cowl Side J/B RH)
14
24 A
5
4
21 B
21 RJ
LG
17 RD
7 RD
5 RA
GR
Y-B
1
A25 Parking Brake Switch Assembly
W-B(LHD)
W-B(RHD)
W-B
W-B
J4
J2
GR
6 2F
2
Front Controller
1
5 2F
L
8 LL
2 LA
GR
24
MPX2
MPX1
J55 Power Source Control ECU
7
GR
7
MPX2
MPX1
J26 Windshield Wiper Switch Assembly
6
SB
W
P (RHD)
W
1 H
2 H
1 B
2
1 D
2 D
B
W
17
18
CA1H
CA1L
MPD2
MPD1
GTX-
GTX+
12
3
21
6
GR
GR
BE
SB
LG
GR GR
BE BE BE
SB SB SB
Y Y Y
P P P
W W W
SB SB SB
GR GR GR

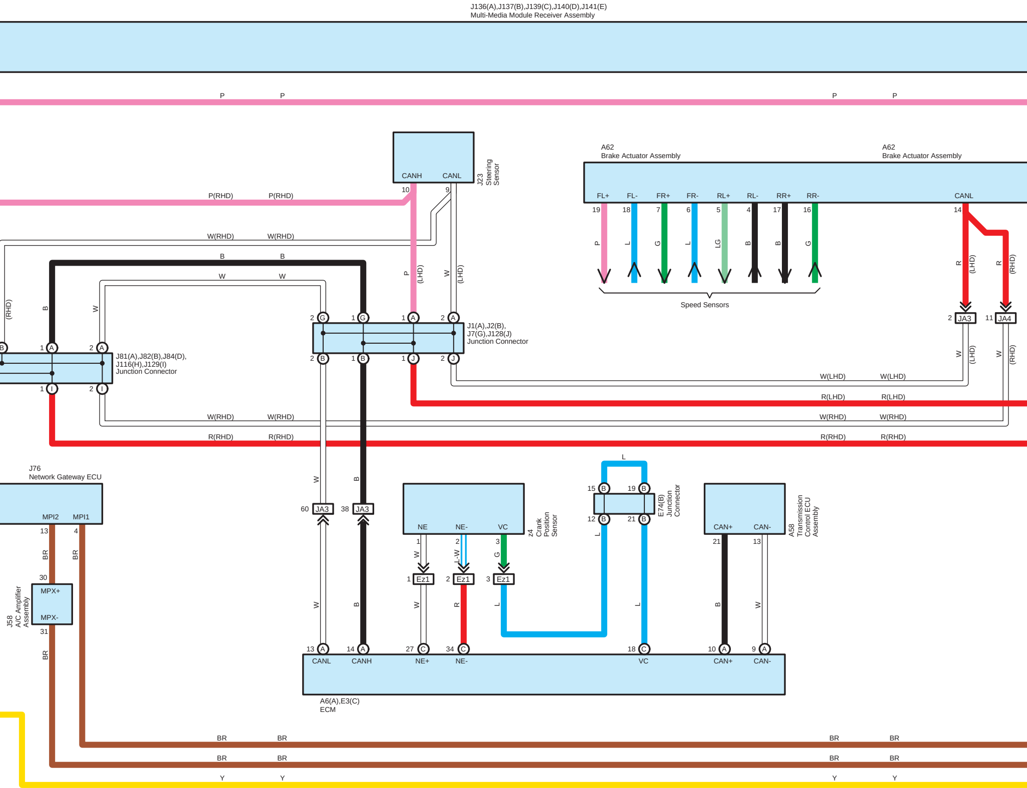
J136(A),J137(B),J139(C),J140(D),J141(E)
Multi-Media Module Receiver Assembly
P
P
P
P
CANH
CANL
J23
Steering
Sensor
10
9
P(RHD)
P(RHD)
W(RHD)
W(RHD)
B
B
W
W
P
(LHD)
W
(LHD)
(RHD)
B
W
A62
Brake Actuator Assembly
A62
Brake Actuator Assembly
FL+
FL-
FR+
FR-
RL+
RL-
RR+
RR-
CANL
19
18
7
6
5
4
17
16
14
P
L
G
L
LG
B
B
G
R
(LHD)
R
(RHD)
Speed Sensors
2
JA3
11
JA4
W
(LHD)
W
(RHD)
2 G
1 G
1 A
2 A
J1(A),J2(B),
J7(G),J128(J)
Junction Connector
2 B
1 B
1 J
2 J
B
1 A
2 A
J81(A),J82(B),J84(D),
J116(H),J129(I)
Junction Connector
1 I
2 I
W(LHD)
W(LHD)
R(LHD)
R(LHD)
W(RHD)
W(RHD)
W(RHD)
W(RHD)
R(RHD)
R(RHD)
R(RHD)
R(RHD)
J76
Network Gateway ECU
MPI2
MPI1
13
4
BR
BR
30
MPX+
MPX-
J58
A/C Amplifier
Assembly
31
BR
W
B
60
JA3
38
JA3
W
B
NE
NE-
VC
z4
Crank
Position
Sensor
1
2
3
W
L-W
G
1
Ez1
2
Ez1
3
Ez1
W
R
L
L
15 B
19 B
12 B
21 B
E74(B)
Junction
Connector
L
L
CAN+
CAN-
A58
Transmission
Control ECU
Assembly
21
13
B
W
13 A
14 A
27 C
34 C
18 C
10 A
9 A
CANL
CANH
NE+
NE-
VC
CAN+
CAN-
A6(A),E3(C)
ECM
BR
BR
BR
BR
BR
BR
BR
BR
Y
Y
Y
Y

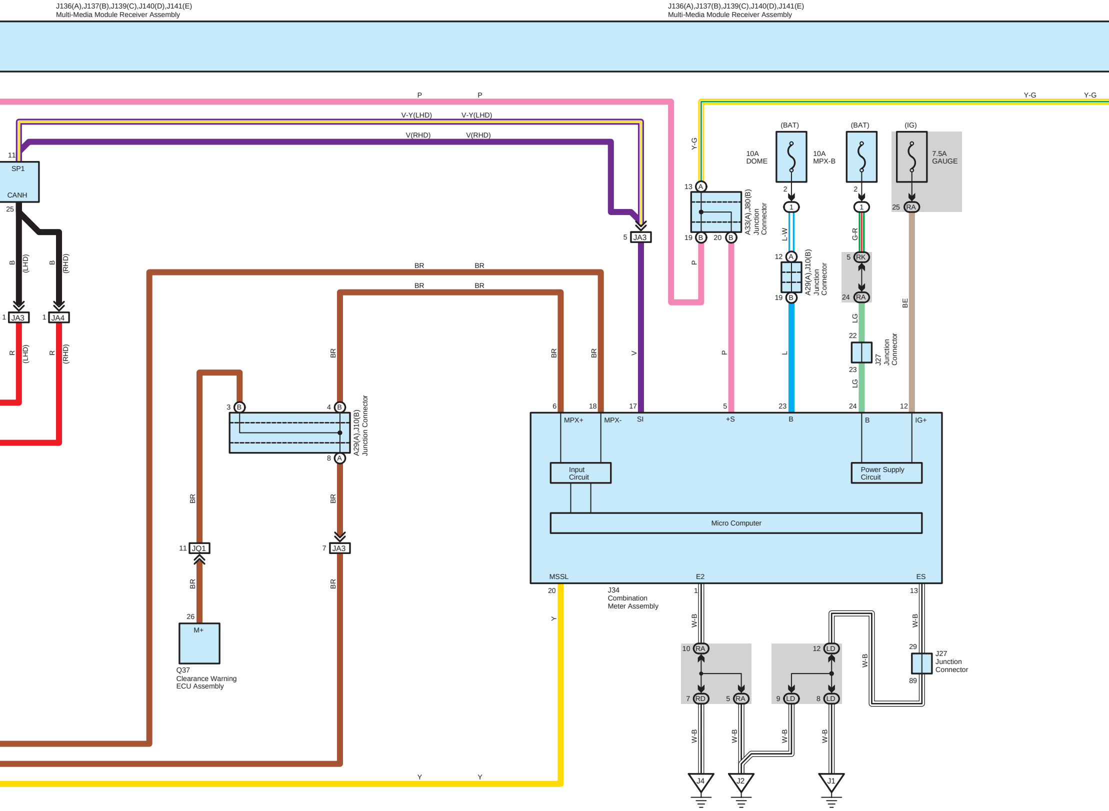
J136(A),J137(B),J139(C),J140(D),J141(E)
Multi-Media Module Receiver Assembly
J136(A),J137(B),J139(C),J140(D),J141(E)
Multi-Media Module Receiver Assembly
P
P
V-Y(LHD)
V-Y(LHD)
V(RHD)
V(RHD)
Y-G
Y-G
Y-G
11
SP1
CANH
25
B
(LHD)
B
(RHD)
1
JA3
1
JA4
R
(LHD)
R
(RHD)
5
JA3
V
13
A
19
B
20
B
A33(A),J80(B)
Junction
Connector
P
P
(BAT)
10A
DOME
2
1
L-W
12
A
19
B
A29(A),J10(B)
Junction
Connector
L
(BAT)
10A
MPX-B
2
1
G-R
5
RK
24
RA
LG
22
23
J27
Junction
Connector
LG
(IG)
7.5A
GAUGE
25
RA
BE
BR
BR
BR
BR
BR
BR
BR
3
B
4
B
8
A
A29(A),J10(B)
Junction Connector
BR
BR
11
JQ1
BR
26
M+
Q37
Clearance Warning
ECU Assembly
7
JA3
BR
6
MPX+
18
MPX-
17
SI
5
+S
23
B
24
B
12
IG+
Input
Circuit
Power Supply
Circuit
Micro Computer
MSSL
E2
ES
20
J34
Combination
Meter Assembly
1
13
Y
W-B
10
RA
7
RD
5
RA
12
LD
9
LD
8
LD
W-B
W-B
29
J27
Junction
Connector
89
W-B
W-B
W-B
W-B
J4
J2
J1
Y
Y

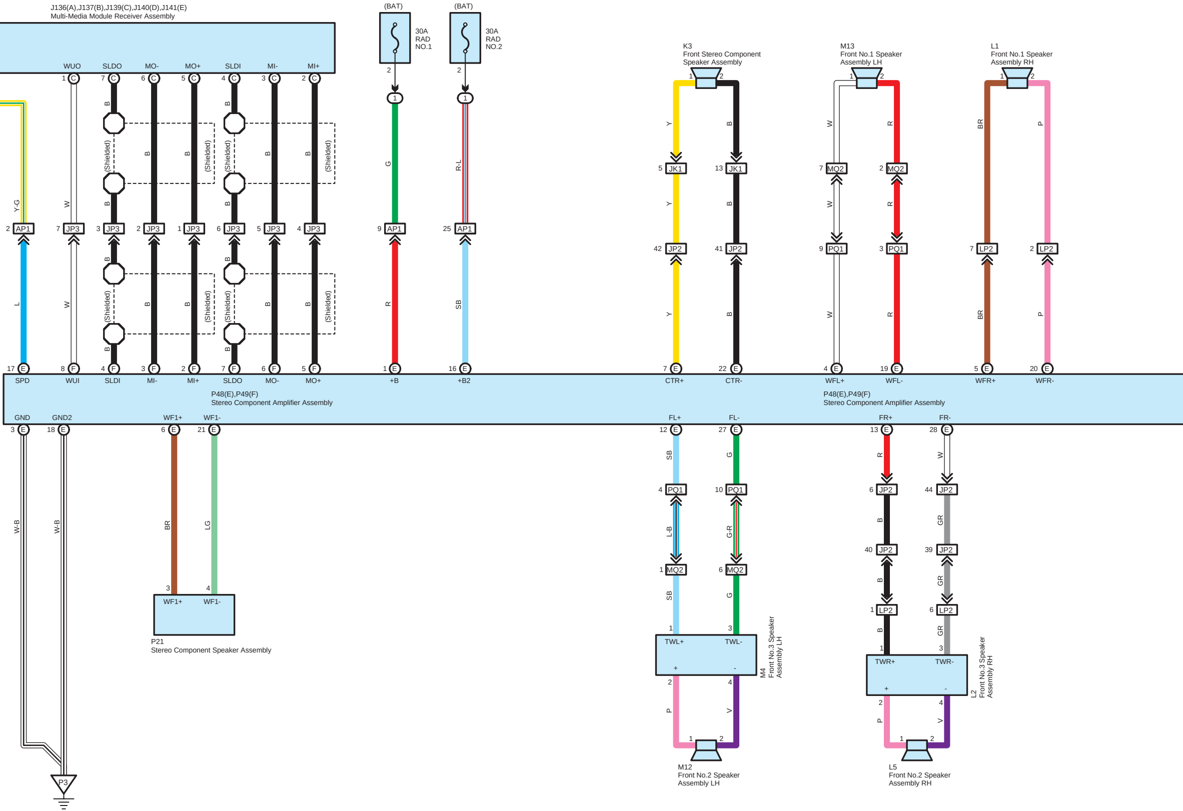
J136(A),J137(B),J139(C),J140(D),J141(E)
Multi-Media Module Receiver Assembly
WUO
SLDO
MO-
MO+
SLDI
MI-
MI+
1 C
7 C
6 C
5 C
4 C
3 C
2 C
(BAT)
30A
RAD
NO.1
(BAT)
30A
RAD
NO.2
2
1
G
R-L
(Shielded)
B
W
Y-G
2 AP1
7 JP3
3 JP3
2 JP3
1 JP3
6 JP3
5 JP3
4 JP3
9 AP1
25 AP1
L
R
SB
17 E
8 F
4 F
3 F
2 F
7 F
6 F
5 F
1 E
16 E
SPD
WUI
SLDI
MI-
MI+
SLDO
MO-
MO+
+B
+B2
P48(E),P49(F)
Stereo Component Amplifier Assembly
GND
GND2
WF1+
WF1-
3 E
18 E
6 E
21 E
W-B
BR
LG
3
4
WF1+
WF1-
P21
Stereo Component Speaker Assembly
P3
K3
Front Stereo Component
Speaker Assembly
M13
Front No.1 Speaker
Assembly LH
L1
Front No.1 Speaker
Assembly RH
Y
B
W
R
BR
P
5 JK1
13 JK1
7 MQ2
2 MQ2
42 JP2
41 JP2
9 PQ1
3 PQ1
7 LP2
2 LP2
7 E
22 E
4 E
19 E
5 E
20 E
CTR+
CTR-
WFL+
WFL-
WFR+
WFR-
P48(E),P49(F)
Stereo Component Amplifier Assembly
FL+
FL-
FR+
FR-
12 E
27 E
13 E
28 E
SB
G
4 PQ1
10 PQ1
L-B
G-R
1 MQ2
6 MQ2
TWL+
TWL-
+
-
M4
Front No.3 Speaker
Assembly LH
V
M12
Front No.2 Speaker
Assembly LH
6 JP2
44 JP2
40 JP2
39 JP2
1 LP2
6 LP2
GR
TWR+
TWR-
L2
Front No.3 Speaker
Assembly RH
L5
Front No.2 Speaker
Assembly RH

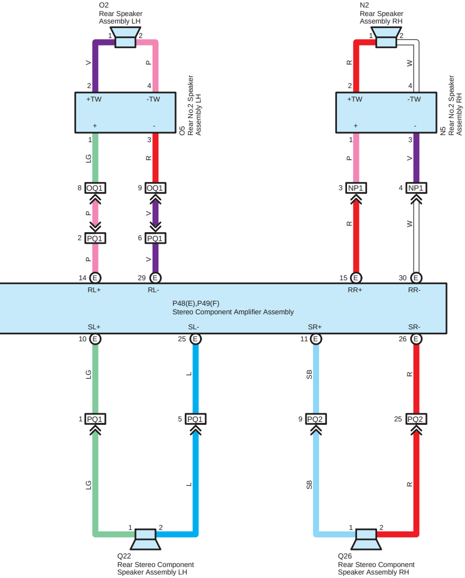
O2
Rear Speaker
Assembly LH
1
2
V
P
2
4
+TW
-TW
+
-
O5
Rear No.2 Speaker
Assembly LH
1
3
LG
R
8
OQ1
9
OQ1
P
V
2
PQ1
6
PQ1
P
V
14
E
29
E
N2
Rear Speaker
Assembly RH
1
2
R
W
2
4
+TW
-TW
+
-
N5
Rear No.2 Speaker
Assembly RH
1
3
P
V
3
NP1
4
NP1
R
W
15
E
30
E
RL+
RL-
RR+
RR-
P48(E),P49(F)
Stereo Component Amplifier Assembly
SL+
SL-
SR+
SR-
10
E
25
E
11
E
26
E
LG
L
SB
R
1
PQ1
5
PQ1
9
PQ2
25
PQ2
LG
L
SB
R
1
2
Q22
Rear Stereo Component
Speaker Assembly LH
1
2
Q26
Rear Stereo Component
Speaker Assembly RH