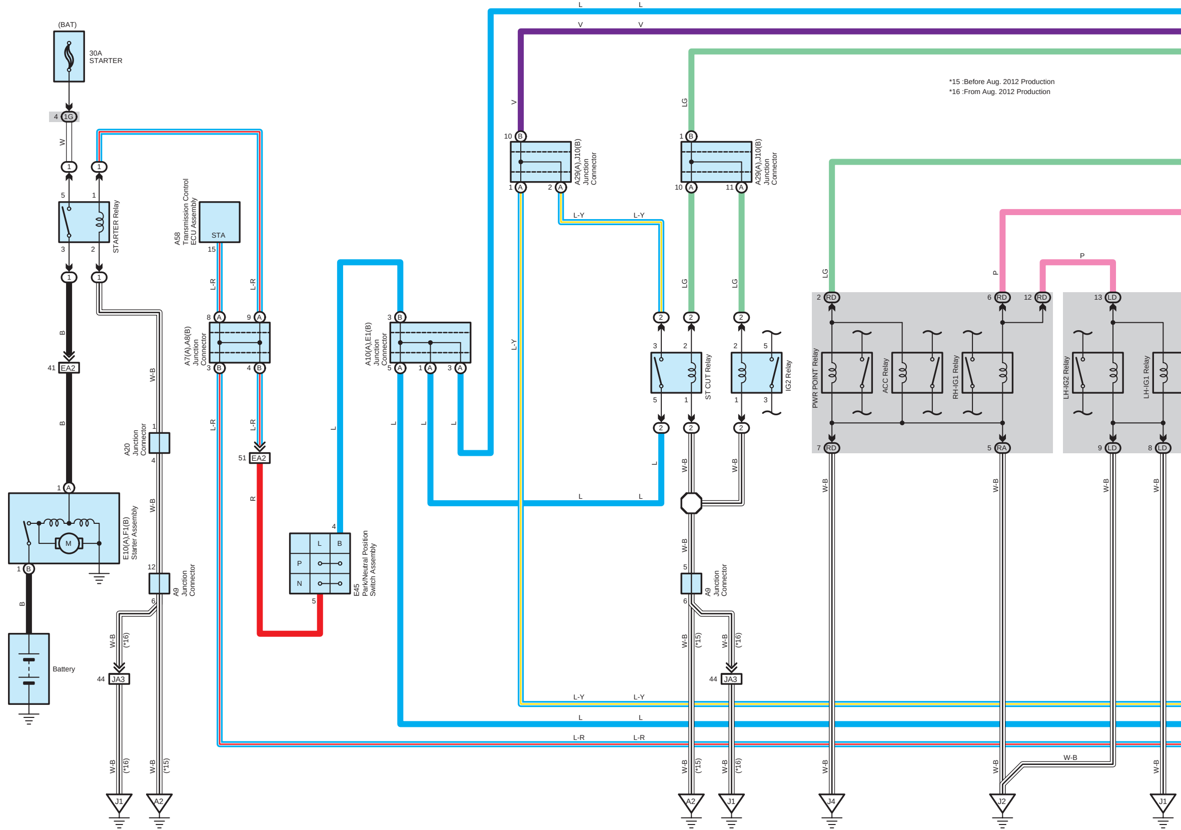
(BAT)
30A
STARTER
4 1G
W
STARTER Relay
A58
Transmission Control
ECU Assembly
STA
15
L-R
A7(A),A8(B)
Junction
Connector
EA2
41
51
B
R
E10(A),F1(B)
Starter Assembly
M
Battery
A20
Junction
Connector
W-B
A9
Junction
Connector
JA3
44
(*16)
(*15)
J1
A2
E45
Park/Neutral Position
Switch Assembly
L
P
N
A10(A),E1(B)
Junction
Connector
A29(A),J10(B)
Junction
Connector
L-Y
V
LG
ST CUT Relay
IG2 Relay
PWR POINT Relay
ACC Relay
RH-IG1 Relay
LH-IG2 Relay
LH-IG1 Relay
RD
RA
LD
J4
J2
*15 :Before Aug. 2012 Production
*16 :From Aug. 2012 Production

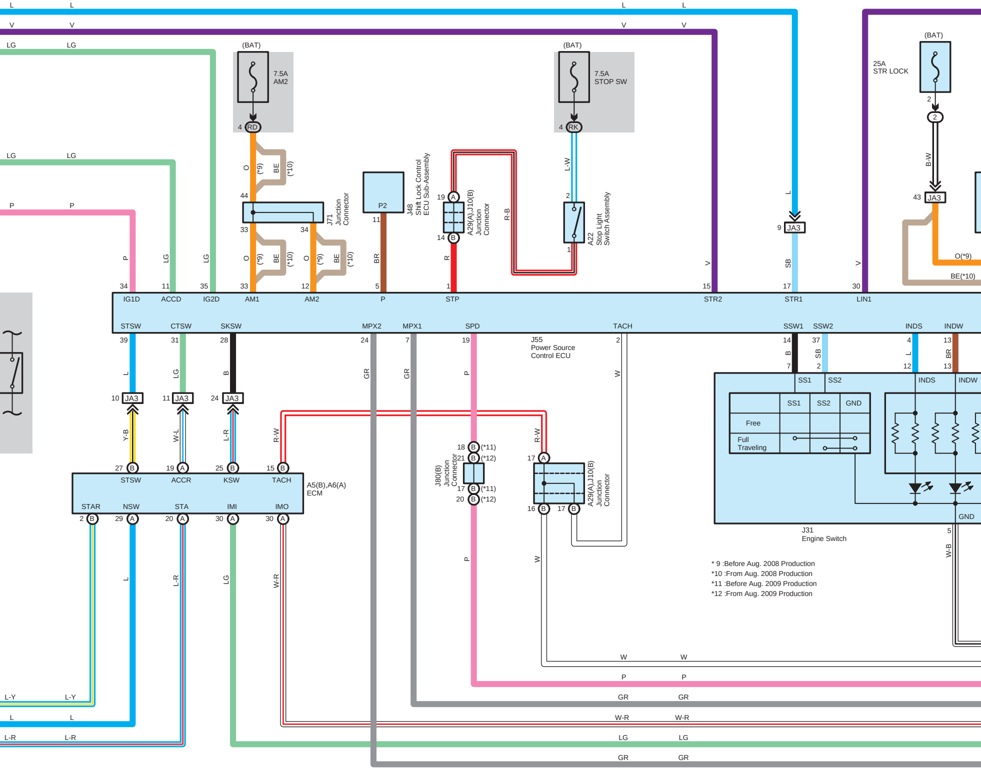
(BAT)
7.5A
AM2
4 RD
44
33
34
J71
Junction
Connector
(*9)
(*10)
O
BE
P2
11
BR
J48
Shift Lock Control
ECU Sub-Assembly
19 A
14 B
A29(A),J10(B)
Junction
Connector
R-B
R
(BAT)
7.5A
STOP SW
4 RK
L-W
2
1
A22
Stop Light
Switch Assembly
L
9 JA3
SB
(BAT)
25A
STR LOCK
2
B-W
43 JA3
O(*9)
BE(*10)
IG1D
ACCD
IG2D
AM1
AM2
P
STP
STR2
STR1
LIN1
STSW
CTSW
SKSW
MPX2
MPX1
SPD
TACH
SSW1
SSW2
INDS
INDW
J55
Power Source
Control ECU
10 JA3
11 JA3
24 JA3
Y-B
W-L
L-R
R-W
GR
P
W
STSW
ACCR
KSW
TACH
STAR
NSW
STA
IMI
IMO
A5(B),A6(A)
ECM
18 B (*11)
21 B (*12)
17 B (*11)
20 B (*12)
J80(B)
Junction
Connector
17 A
16 B
17 B
A29(A),J10(B)
Junction
Connector
SS1
SS2
GND
Free
Full
Traveling
INDS
INDW
GND
J31
Engine Switch
W-B
L-Y
L
L-R
W
P
GR
W-R
LG
GR

* 9 :Before Aug. 2008 Production
*10 :From Aug. 2008 Production
*11 :Before Aug. 2009 Production
*12 :From Aug. 2009 Production

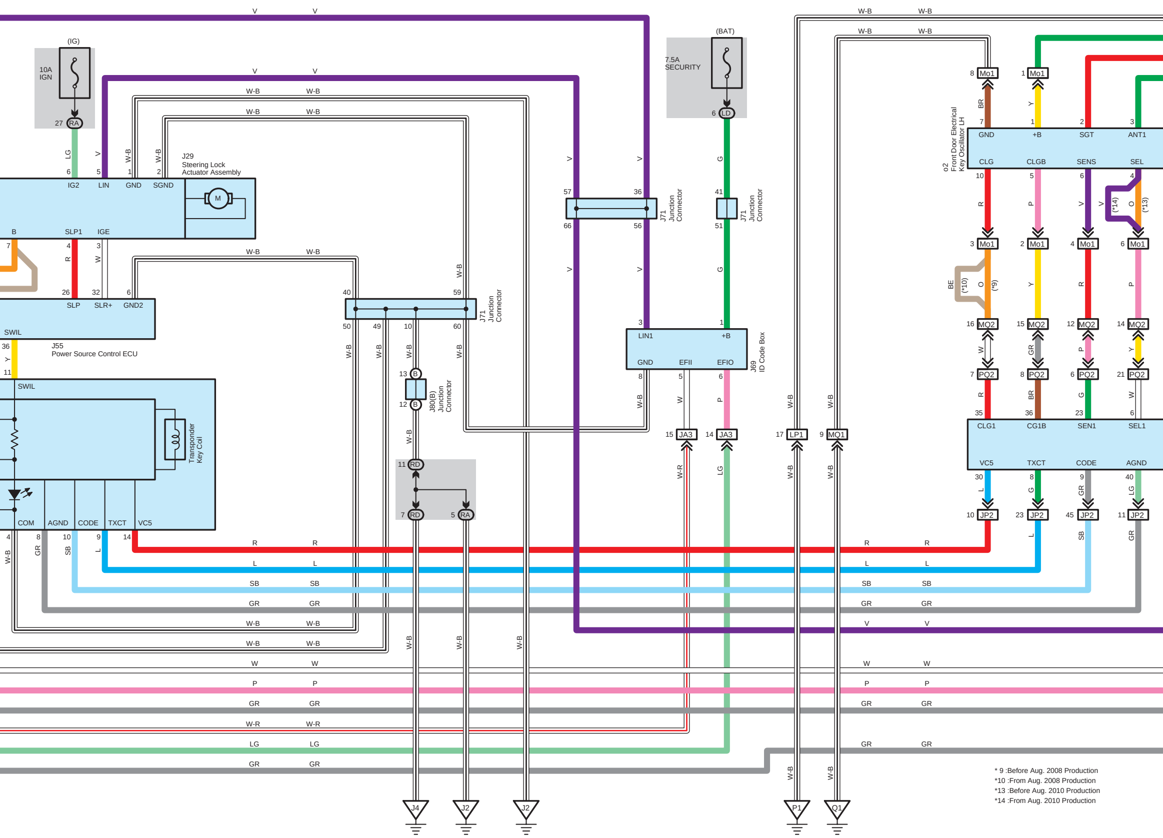
(IG)
10A
IGN
27 RA
(BAT)
7.5A
SECURITY
6 LD
J29
Steering Lock
Actuator Assembly
IG2
LIN
GND
SGND
M
B
SLP1
IGE
SLP
SLR+
GND2
SWIL
J55
Power Source Control ECU
SWIL
Transponder
Key Coil
COM
AGND
CODE
TXCT
VC5
J71
Junction
Connector
J80(B)
Junction
Connector
13 B
12 B
11 RD
7 RD
5 RA
J69
ID Code Box
LIN1
+B
GND
EFII
EFIO
15 JA3
14 JA3
17 LP1
9 MO1
o2
Front Door Electrical
Key Oscillator LH
GND
+B
SGT
ANT1
CLG
CLGB
SENS
SEL
8 Mo1
1 Mo1
3 Mo1
2 Mo1
4 Mo1
6 Mo1
16 MQ2
15 MQ2
12 MQ2
14 MQ2
7 PQ2
8 PQ2
6 PQ2
21 PQ2
CLG1
CG1B
SEN1
SEL1
VC5
TXCT
CODE
AGND
10 JP2
23 JP2
45 JP2
11 JP2
(*9)
(*10)
(*13)
(*14)
J4
J2
J2
P1
Q1
V
W-B
LG
R
W
Y
G
BR
P
O
BE
GR
L
SB
W-R

* 9 :Before Aug. 2008 Production
*10 :From Aug. 2008 Production
*13 :Before Aug. 2010 Production
*14 :From Aug. 2010 Production

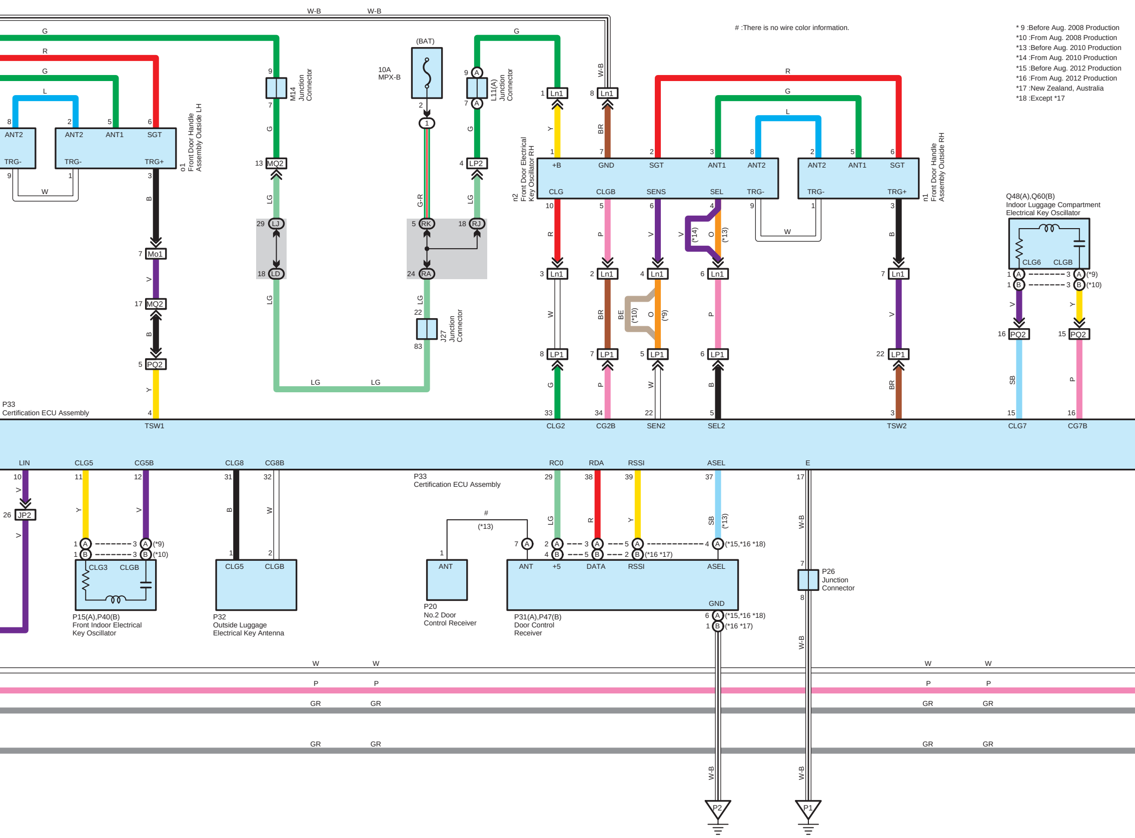

:There is no wire color information.

*9 :Before Aug. 2008 Production
*10 :From Aug. 2008 Production
*13 :Before Aug. 2010 Production
*14 :From Aug. 2010 Production
*15 :Before Aug. 2012 Production
*16 :From Aug. 2012 Production
*17 :New Zealand, Australia
*18 :Except *17

W-B
G
R
L
ANT2
ANT1
SGT
TRG-
TRG+
o1
Front Door Handle
Assembly Outside LH
M14
Junction
Connector
MQ2
Mo1
PQ2
LJ
LD
(BAT)
10A
MPX-B
L11(A)
Junction
Connector
LP2
RK
RJ
RA
G-R
LG
J27
Junction
Connector
Ln1
LP1
n2
Front Door Electrical
Key Oscillator RH
+B
GND
SGT
ANT1
ANT2
CLG
CLGB
SENS
SEL
TRG-
n1
Front Door Handle
Assembly Outside RH
(*14)
(*13)
(*10)
(*9)
BE
Q48(A),Q60(B)
Indoor Luggage Compartment
Electrical Key Oscillator
CLG6
CLGB
P33
Certification ECU Assembly
TSW1
CLG2
CG2B
SEN2
SEL2
TSW2
CLG7
CG7B
LIN
CLG5
CG5B
CLG8
CG8B
RCO
RDA
RSSI
ASEL
E
JP2
CLG3
CLGB
P15(A),P40(B)
Front Indoor Electrical
Key Oscillator
CLG5
CLGB
P32
Outside Luggage
Electrical Key Antenna
ANT
P20
No.2 Door
Control Receiver
(*13)
ANT
+5
DATA
RSSI
ASEL
GND
P31(A),P47(B)
Door Control
Receiver
(*15,*16 *18)
(*16 *17)
P26
Junction
Connector
W
P
GR
P2
P1

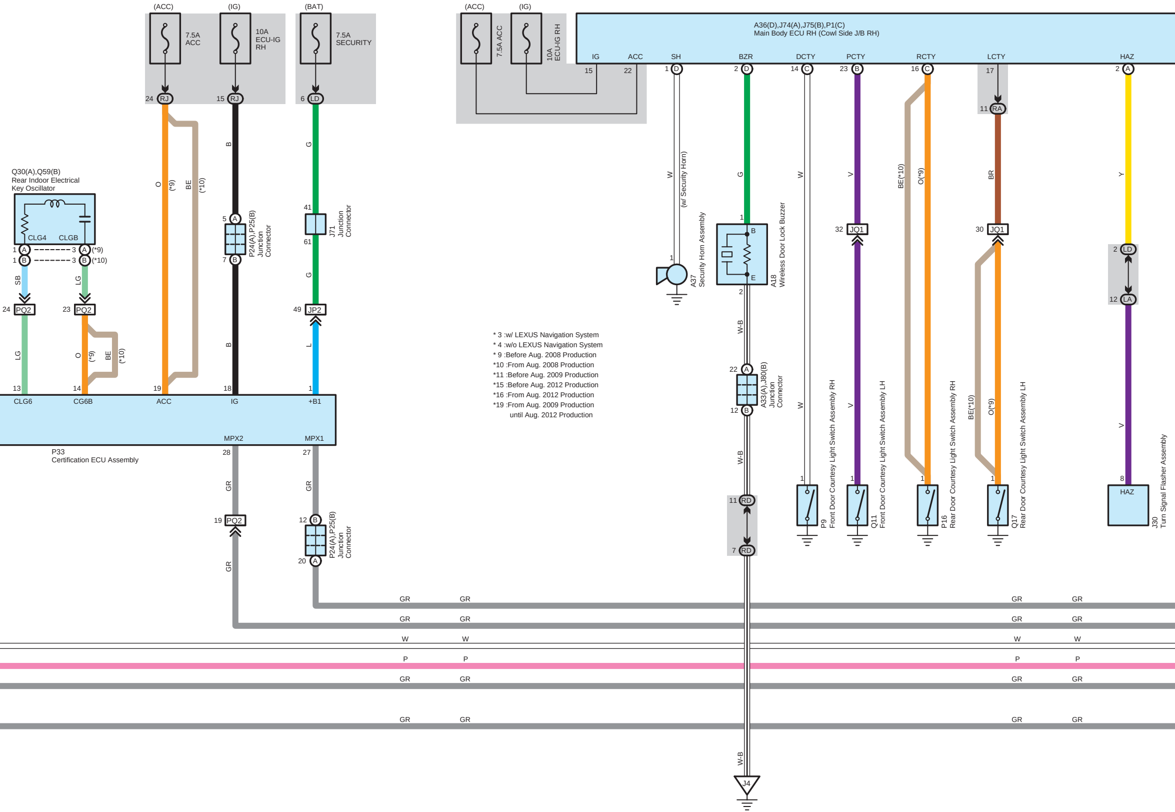
(ACC)
7.5A
ACC
(IG)
10A
ECU-IG
RH
(BAT)
7.5A
SECURITY
(ACC)
7.5A ACC
(IG)
10A
ECU-IG RH
A36(D),J74(A),J75(B),P1(C)
Main Body ECU RH (Cowl Side J/B RH)
IG
ACC
SH
BZR
DCTY
PCTY
RCTY
LCTY
HAZ
15
22
24 RJ
15 RJ
6 LD
Q30(A),Q59(B)
Rear Indoor Electrical
Key Oscillator
CLG4
CLGB
(*9)
(*10)
SB
LG
24 PQ2
23 PQ2
O
(*9)
BE
(*10)
13
14
CLG6
CG6B
19
ACC
18
IG
1
+B1
MPX2
MPX1
P33
Certification ECU Assembly
28
27
GR
19 PQ2
12 B
20 A
P24(A),P25(B)
Junction
Connector
5 A
7 B
41
61
J71
Junction
Connector
G
49 JP2
L
B
W
(w/ Security Horn)
A37
Security Horn Assembly
A18
Wireless Door Lock Buzzer
W-B
22 A
12 B
A33(A),J80(B)
Junction
Connector
11 RD
7 RD
J4
V
32 JQ1
30 JQ1
BE(*10)
O(*9)
11 RA
BR
Y
2 LD
12 LA
8
HAZ
P9
Front Door Courtesy Light Switch Assembly RH
Q11
Front Door Courtesy Light Switch Assembly LH
P16
Rear Door Courtesy Light Switch Assembly RH
Q17
Rear Door Courtesy Light Switch Assembly LH
J30
Turn Signal Flasher Assembly
GR
W
P

* 3 :w/ LEXUS Navigation System
* 4 :w/o LEXUS Navigation System
* 9 :Before Aug. 2008 Production
*10 :From Aug. 2008 Production
*11 :Before Aug. 2009 Production
*15 :Before Aug. 2012 Production
*16 :From Aug. 2012 Production
*19 :From Aug. 2009 Production
until Aug. 2012 Production

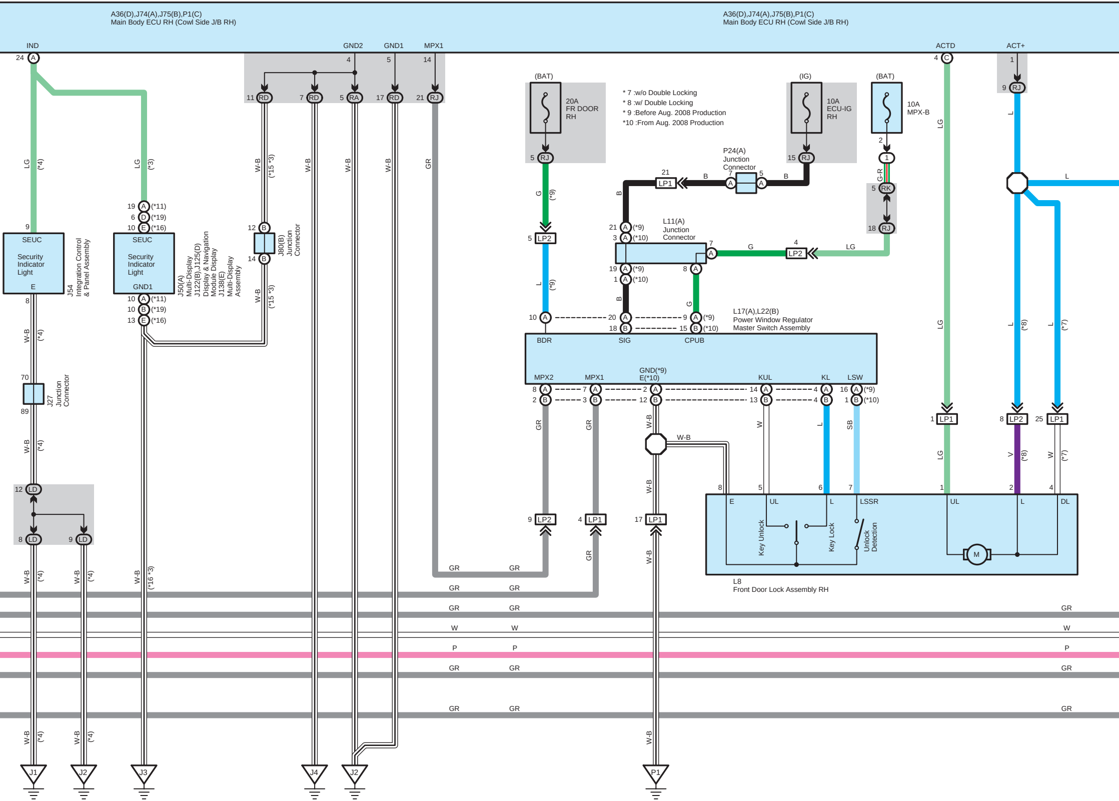
A36(D),J74(A),J75(B),P1(C)
Main Body ECU RH (Cowl Side J/B RH)
A36(D),J74(A),J75(B),P1(C)
Main Body ECU RH (Cowl Side J/B RH)
IND
GND2
GND1
MPX1
ACTD
ACT+
24 A
4
5
14
4 C
1
11 RD
7 RD
5 RA
17 RD
21 RJ
9 RJ
LG (*4)
LG (*3)
W-B (*15 *3)
W-B
W-B
W-B
GR
(BAT)
20A FR DOOR RH
5 RJ
(IG)
10A ECU-IG RH
15 RJ
(BAT)
10A MPX-B
2
1
G-R
5 RK
18 RJ
P24(A) Junction Connector
21 LP1
B
7 A
5 A
B
B
G (*9)
5 LP2
L (*9)
L11(A) Junction Connector
21 A (*9)
3 A (*10)
7 A
G
4 LP2
LG
19 A (*9)
1 A (*10)
8 A
B
G
10 A
20 A
9 A (*9)
18 B
15 B (*10)
L17(A),L22(B)
Power Window Regulator
Master Switch Assembly
BDR
SIG
CPUB
MPX2
MPX1
GND(*9)
E(*10)
KUL
KL
LSW
8 A
7 A
2 A
14 A
4 A
16 A (*9)
2 B
3 B
12 B
13 B
4 B
1 B (*10)
GR
GR
W-B
W-B
W
L
SB
LG
L (*8)
L (*7)
1 LP1
8 LP2
25 LP1
LG
V (*8)
W (*7)
L
9
SEUC
Security Indicator Light
E
J54 Integration Control & Panel Assembly
19 A (*11)
6 D (*19)
10 E (*16)
SEUC
Security Indicator Light
GND1
10 A (*11)
10 B (*19)
13 E (*16)
J50(A) Multi-Display
J122(B),J125(D) Display & Navigation Module Display
J138(E) Multi-Display Assembly
12 B
14 B
J80(B) Junction Connector
W-B (*15 *3)
8
W-B (*4)
70
J27 Junction Connector
89
W-B (*4)
12 LD
8 LD
9 LD
W-B (*4)
W-B (*4)
W-B (*16 *3)
W-B
8
5
6
7
1
2
4
E
UL
L
LSSR
UL
L
DL
Key Unlock
Key Lock
Unlock Detection
M
L8
Front Door Lock Assembly RH
9 LP2
4 LP1
17 LP1
GR
W-B
GR
GR
GR
GR
GR
GR
GR
GR
W
W
W
P
P
P
GR
GR
GR
GR
GR
GR
W-B (*4)
W-B (*4)
W-B
J1
J2
J3
J4
J2
P1

* 7 :w/o Double Locking
* 8 :w/ Double Locking
* 9 :Before Aug. 2008 Production
*10 :From Aug. 2008 Production

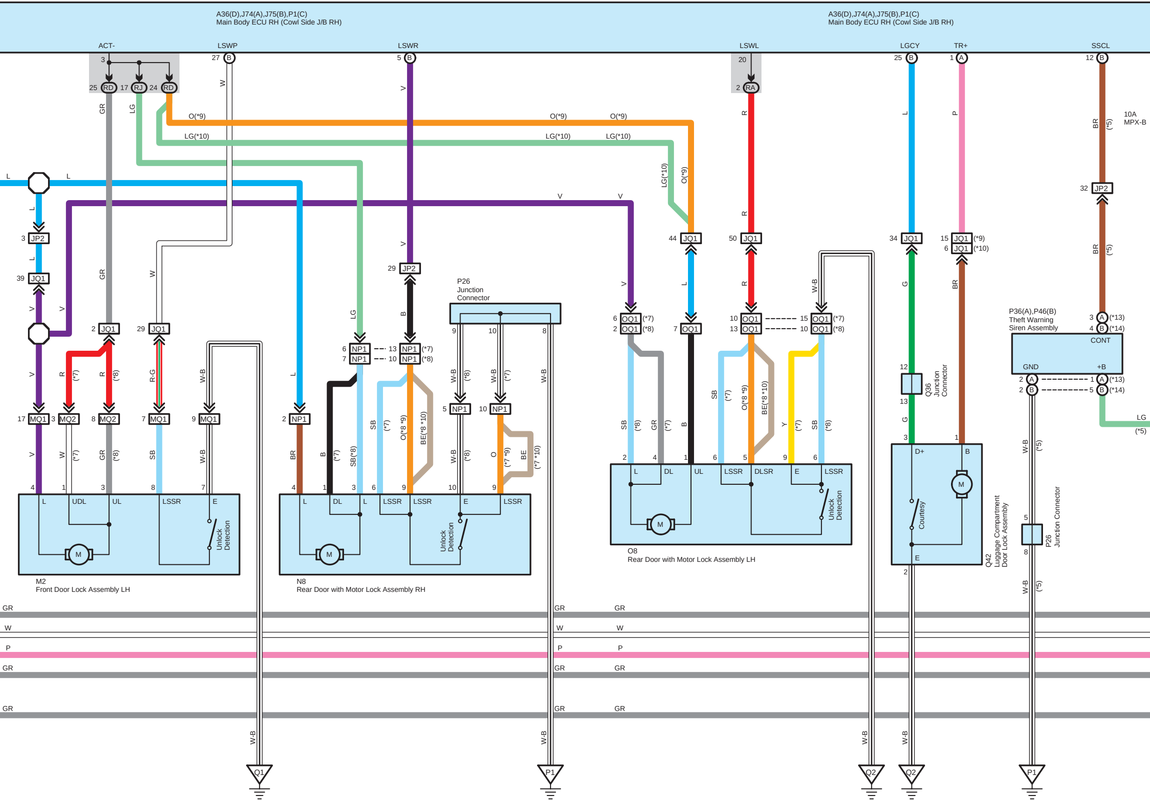
A36(D),J74(A),J75(B),P1(C)
Main Body ECU RH (Cowl Side J/B RH)
A36(D),J74(A),J75(B),P1(C)
Main Body ECU RH (Cowl Side J/B RH)
ACT-
LSWP
LSWR
LSWL
LGCY
TR+
SSCL
3
25 RD
17 RJ
24 RD
27 B
5 B
20
2 RA
25 B
1 A
12 B
O(*9)
LG(*10)
10A
MPX-B
BR (*5)
32 JP2
3 JP2
39 JQ1
2 JQ1
29 JQ1
29 JP2
44 JQ1
50 JQ1
34 JQ1
15 JQ1 (*9)
6 JQ1 (*10)
P26 Junction Connector
P36(A),P46(B) Theft Warning Siren Assembly
CONT
GND
+B
3 A (*13)
4 B (*14)
2 A
2 B
1 A (*13)
5 B (*14)
17 MQ1
3 MQ2
8 MQ2
7 MQ1
9 MQ1
2 NP1
6 NP1
7 NP1
13 NP1 (*7)
10 NP1 (*8)
5 NP1
10 NP1
6 OQ1 (*7)
2 OQ1 (*8)
7 OQ1
10 OQ1
13 OQ1
15 OQ1 (*7)
10 OQ1 (*8)
12
13
Q36 Junction Connector
L
UDL
UL
LSSR
E
DL
DLSR
Unlock Detection
M
D+
B
Courtesy
M2
Front Door Lock Assembly LH
N8
Rear Door with Motor Lock Assembly RH
O8
Rear Door with Motor Lock Assembly LH
Q42
Luggage Compartment Door Lock Assembly
P26 Junction Connector
5
8
W-B (*5)
GR
W
P
GR
GR
Q1
P1
Q2
Q2
P1

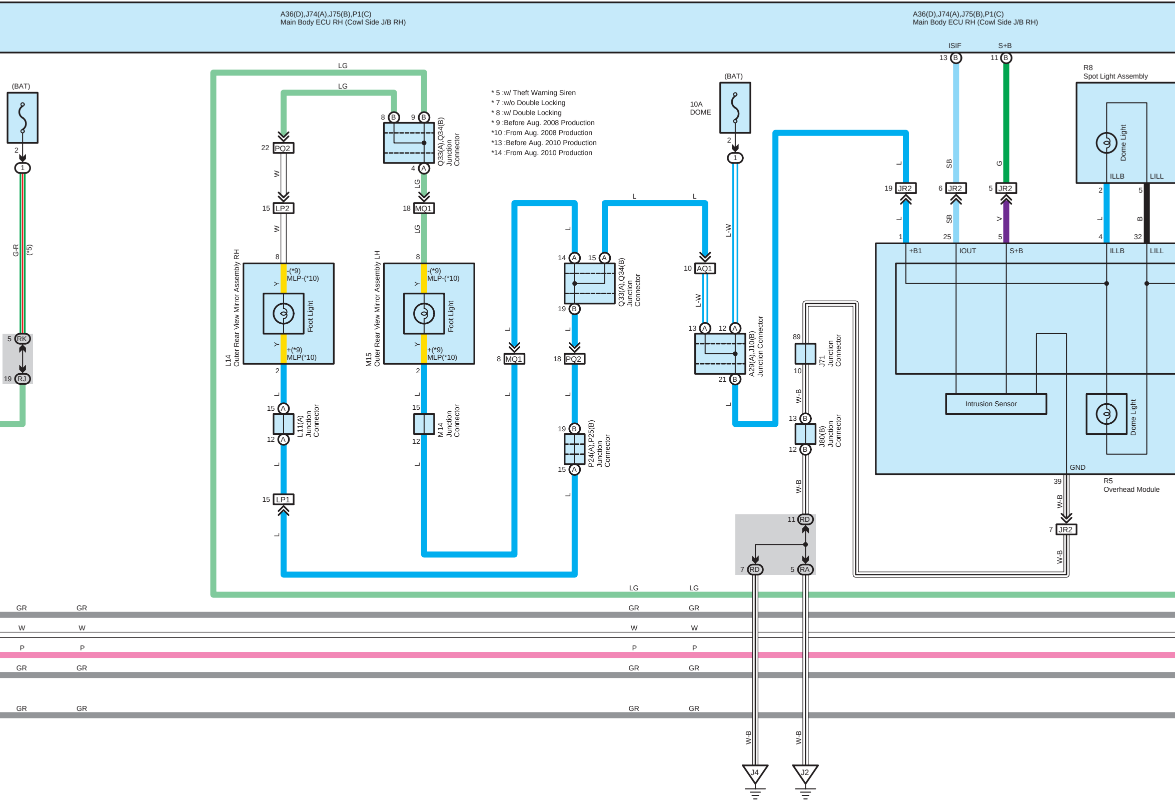

* 5 :w/ Theft Warning Siren
* 7 :w/o Double Locking
* 8 :w/ Double Locking
* 9 :Before Aug. 2008 Production
*10 :From Aug. 2008 Production
*13 :Before Aug. 2010 Production
*14 :From Aug. 2010 Production

A36(D),J74(A),J75(B),P1(C)
Main Body ECU RH (Cowl Side J/B RH)
A36(D),J74(A),J75(B),P1(C)
Main Body ECU RH (Cowl Side J/B RH)
ISIF
S+B
13 B
11 B
(BAT)
2
1
G-R
(*5)
5 RK
19 RJ
LG
LG
22 PQ2
W
15 LP2
W
8
8 B
9 B
Q33(A),Q34(B)
Junction
Connector
4 A
LG
18 MQ1
LG
8
L14
Outer Rear View Mirror Assembly RH
Y
-(*9)
MLP-(*10)
Foot Light
Y
+(*9)
MLP(*10)
2
L
15 A
L11(A)
Junction
Connector
12 A
L
15 LP1
L
M15
Outer Rear View Mirror Assembly LH
Y
-(*9)
MLP-(*10)
Foot Light
Y
+(*9)
MLP(*10)
2
L
15
M14
Junction
Connector
12
L
L
8 MQ1
L
L
14 A
15 A
Q33(A),Q34(B)
Junction
Connector
19 B
L
18 PQ2
L
19 B
P24(A),P25(B)
Junction
Connector
15 A
L
L
L
(BAT)
10A
DOME
2
1
L-W
10 AQ1
L-W
13 A
12 A
A29(A),J10(B)
Junction Connector
21 B
L
89
J71
Junction
Connector
10
W-B
13 B
J80(B)
Junction
Connector
12 B
W-B
11 RD
7 RD
5 RA
W-B
W-B
J4
J2
L
19 JR2
L
1
SB
6 JR2
SB
25
G
5 JR2
V
5
R8
Spot Light Assembly
Dome Light
ILLB
LILL
2
L
5
B
4
32
+B1
IOUT
S+B
ILLB
LILL
Intrusion Sensor
Dome Light
GND
R5
Overhead Module
39
W-B
7 JR2
W-B
LG
LG
GR
GR
GR
GR
W
W
W
W
P
P
P
P
GR
GR
GR
GR
GR
GR
GR
GR

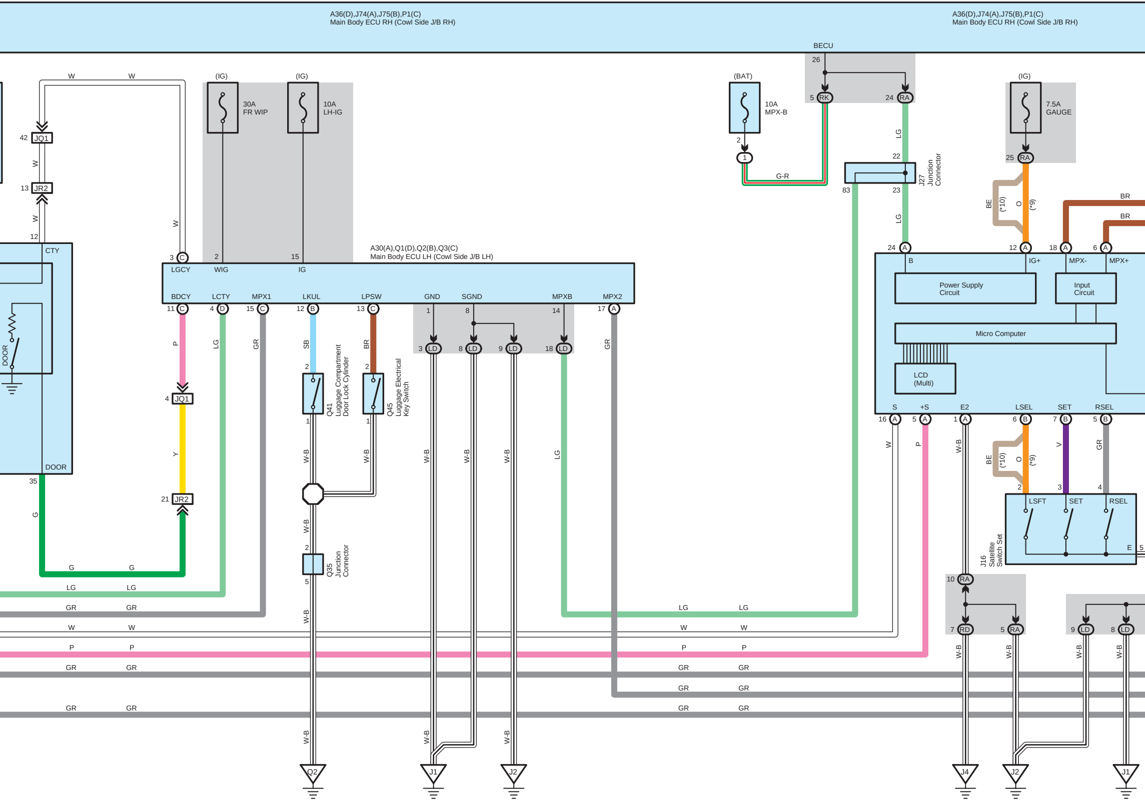
A36(D),J74(A),J75(B),P1(C)
Main Body ECU RH (Cowl Side J/B RH)
A36(D),J74(A),J75(B),P1(C)
Main Body ECU RH (Cowl Side J/B RH)
BECU
26
5 RK
24 RA
(BAT)
10A
MPX-B
2
1
G-R
LG
22
J27
Junction
Connector
83
23
LG
(IG)
7.5A
GAUGE
25 RA
BE
(*10)
O
(*9)
BR
BR
24 A
12 A
18 A
6 A
B
IG+
MPX-
MPX+
Power Supply
Circuit
Input
Circuit
Micro Computer
LCD
(Multi)
S
+S
E2
LSEL
SET
RSEL
16 A
5 A
1 A
6 B
7 B
5 B
W
P
W-B
BE
(*10)
O
(*9)
V
GR
2
3
4
LSFT
SET
RSEL
E
5
J16
Satellite
Switch Set
10 RA
7 RD
5 RA
9 LD
8 LD
W-B
W-B
W-B
W-B
J4
J2
J1
W
W
42 JQ1
W
13 JR2
W
12
CTY
DOOR
DOOR
35
G
(IG)
30A
FR WIP
(IG)
10A
LH-IG
W
3 C
2
15
A30(A),Q1(D),Q2(B),Q3(C)
Main Body ECU LH (Cowl Side J/B LH)
LGCY
WIG
IG
BDCY
LCTY
MPX1
LKUL
LPSW
GND
SGND
MPXB
MPX2
11 C
4 D
15 C
12 B
13 C
1
8
14
17 A
P
LG
GR
SB
BR
GR
3 LD
8 LD
9 LD
18 LD
4 JQ1
Y
21 JR2
2
2
Q41
Luggage Compartment
Door Lock Cylinder
Q45
Luggage Electrical
Key Switch
1
1
W-B
W-B
W-B
W-B
W-B
W-B
LG
W-B
2
Q35
Junction
Connector
5
W-B
G
G
LG
LG
GR
GR
W
W
P
P
GR
GR
GR
GR
LG
LG
W
W
P
P
GR
GR
GR
GR
GR
GR
W-B
W-B
W-B
Q2
J1
J2

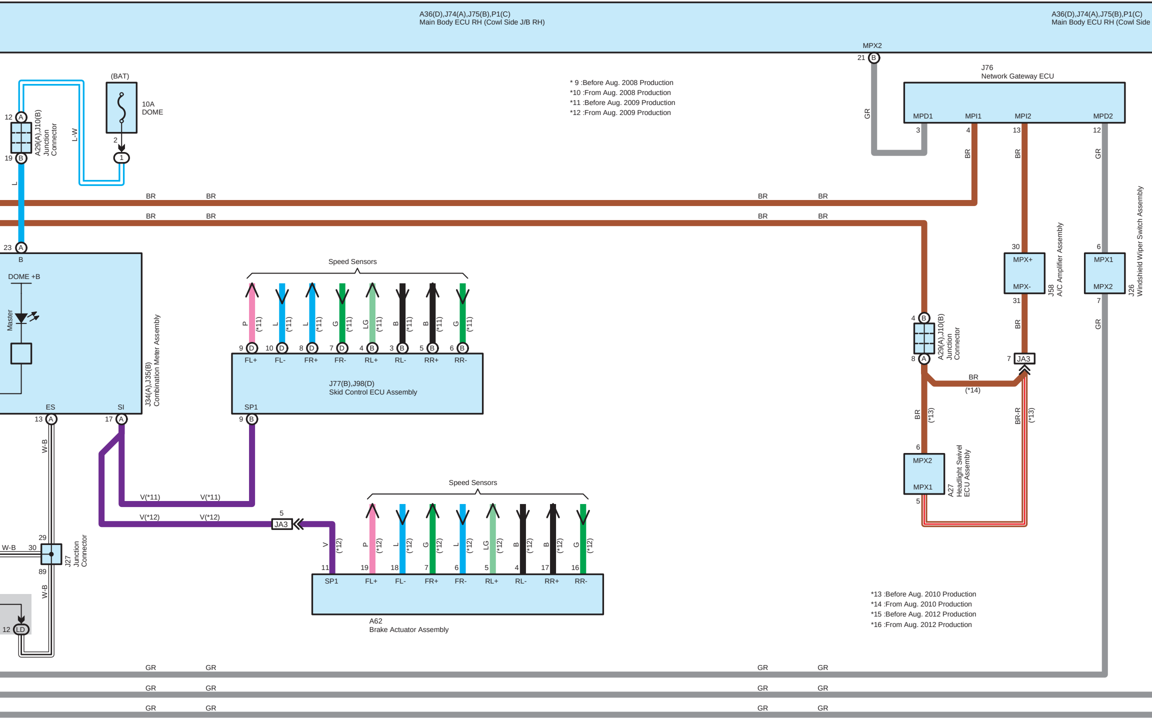
A36(D),J74(A),J75(B),P1(C)
Main Body ECU RH (Cowl Side J/B RH)
A36(D),J74(A),J75(B),P1(C)
Main Body ECU RH (Cowl Side
MPX2
21 B
GR
J76
Network Gateway ECU
MPD1
MPI1
MPI2
MPD2
3
4
13
12
BR
BR
GR
(BAT)
10A
DOME
2
1
L-W
12 A
19 B
A29(A),J10(B)
Junction
Connector
L
BR
BR
BR
BR
BR
BR
BR
BR
23 A
B
DOME +B
Master
J34(A),J35(B)
Combination Meter Assembly
ES
SI
13 A
17 A
W-B
Speed Sensors
P (*11)
L (*11)
L (*11)
G (*11)
LG (*11)
B (*11)
B (*11)
G (*11)
9 D
10 D
8 D
7 D
4 B
3 B
5 B
6 B
FL+
FL-
FR+
FR-
RL+
RL-
RR+
RR-
J77(B),J98(D)
Skid Control ECU Assembly
SP1
9 B
V(*11)
V(*11)
V(*12)
V(*12)
5
JA3
29
W-B
30
89
J27
Junction
Connector
W-B
12 LD
Speed Sensors
V (*12)
P (*12)
L (*12)
G (*12)
L (*12)
LG (*12)
B (*12)
B (*12)
G (*12)
11
19
18
7
6
5
4
17
16
SP1
FL+
FL-
FR+
FR-
RL+
RL-
RR+
RR-
A62
Brake Actuator Assembly
30
MPX+
MPX-
31
J58
A/C Amplifier Assembly
6
MPX1
MPX2
7
J26
Windshield Wiper Switch Assembly
BR
GR
4 B
8 A
A29(A),J10(B)
Junction
Connector
7 JA3
BR
(*14)
BR (*13)
BR-R (*13)
6
MPX2
MPX1
5
A27
Headlight Swivel
ECU Assembly
GR
GR
GR
GR
GR
GR
GR
GR
GR
GR
GR
GR

* 9 :Before Aug. 2008 Production
*10 :From Aug. 2008 Production
*11 :Before Aug. 2009 Production
*12 :From Aug. 2009 Production

*13 :Before Aug. 2010 Production
*14 :From Aug. 2010 Production
*15 :Before Aug. 2012 Production
*16 :From Aug. 2012 Production

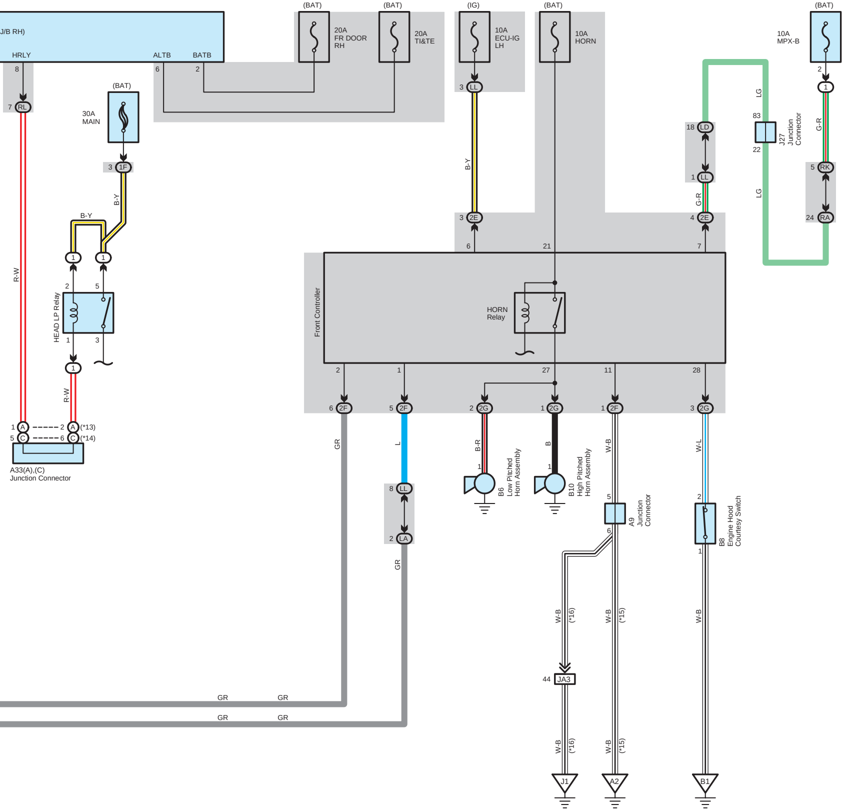
J/B RH)
HRLY
ALTB
BATB
8
6
2
7
RL
(BAT)
30A
MAIN
3
1F
B-Y
B-Y
(BAT)
20A
FR DOOR
RH
(BAT)
20A
TI&TE
(IG)
10A
ECU-IG
LH
3
LL
B-Y
(BAT)
10A
HORN
(BAT)
10A
MPX-B
2
1
LG
83
J27
Junction
Connector
22
LG
G-R
18
LD
1
LL
G-R
5
RK
24
RA
3
2E
4
2E
6
21
7
Front Controller
HORN
Relay
2
1
27
11
28
1
1
2
5
HEAD LP Relay
1
3
1
R-W
R-W
1
A
2
A
(*13)
5
C
6
C
(*14)
A33(A),(C)
Junction Connector
6
2F
5
2F
2
2G
1
2G
1
2F
3
2G
GR
L
B-R
B
W-B
W-L
1
1
B6
Low Pitched
Horn Assembly
B10
High Pitched
Horn Assembly
8
LL
2
LA
GR
5
6
A9
Junction
Connector
2
1
B8
Engine Hood
Courtesy Switch
W-B
(*16)
W-B
(*15)
W-B
44
JA3
W-B
(*16)
W-B
(*15)
J1
A2
B1
GR
GR
GR
GR